Energy Efficient Hydraulics

Variable Frequency Drives as Pump Prime Movers

Presented by Dr.-Ing. Gerd Scheffel

ENGINEERING YOUR SUCCESS.

Copyright © Parker Hannifin GmbH ◦ Dr.-Ing. Gerd Scheffel 2012

Starting with the End in Mind

- Saving energy > only needed power for the motor
  > smaller components
  > higher efficiency
  > less fluid cooling

- Reducing noise > noise only @ high demand

- Increasing power density > higher delivery @ same frame size

Copyright © Parker Hannifin GmbH ◦ Dr.-Ing. Gerd Scheffel 2012

Industrial	-	Mobile
Grid	-	Fuel & Batteries
Electric driven pump	-	Diesel driven pump
>90% linear motion	-	50% linear motion
>90% single rod cylinder	-	50% rotation incl. closed circuit
Standard patterns, cavities & ports	-	Custom cavities & ports
Productivity driven	-	Fuel economy driven
Long lifetime	-	Power density
CNC controlled	-	Man controlled
Milliseconds	-	Seconds
Local hydraulic component intelligence	-	Vehicle electronics
Energy recovery potential low	-	Energy recovery potential high
Low peak energy	-	n/a
Electromechanical competition	-	Hydraulic competition
Many small regional accounts	-	Few large global accounts
Many distributors, sometimes competing	-	Few distributors
Small quantities	-	Mass production.

Copyright © Parker Hannifin GmbH ◦ Dr.-Ing. Gerd Scheffel 2012

Diesel Drive

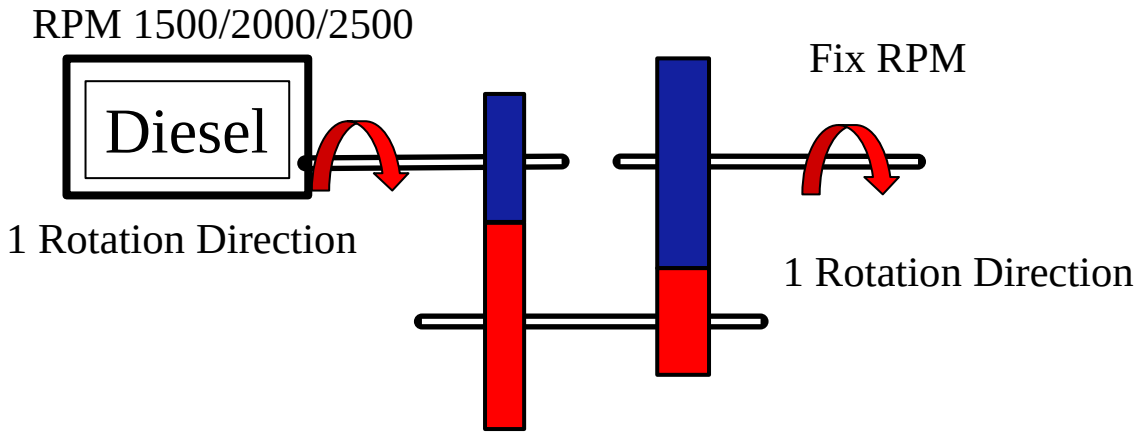

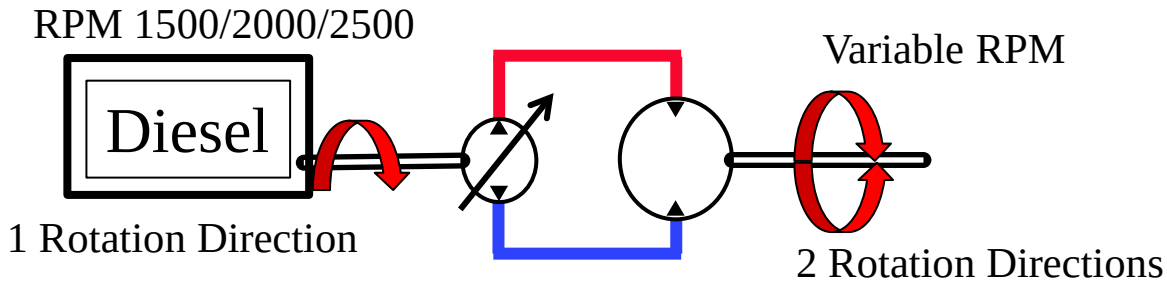

Copyright © Parker Hannifin GmbH ◦ Dr.-Ing. Gerd Scheffel 2012

Electric Drive

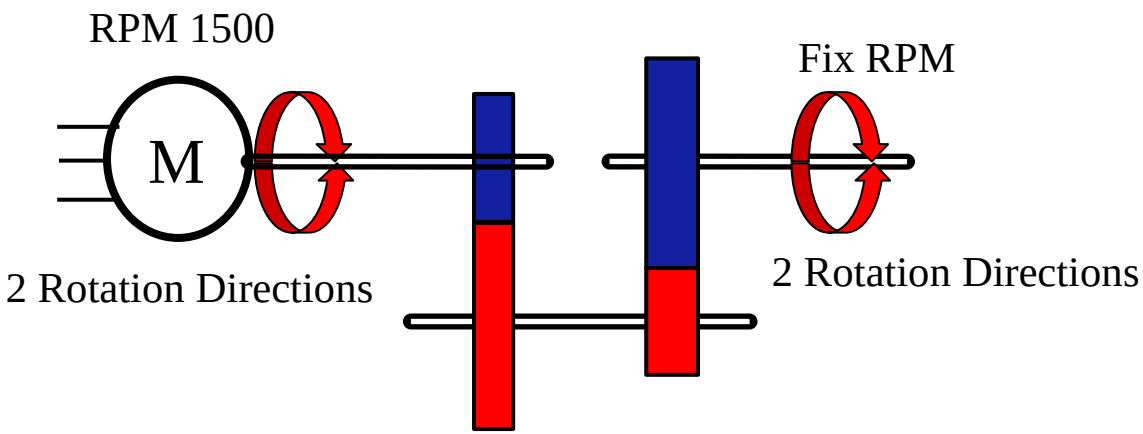

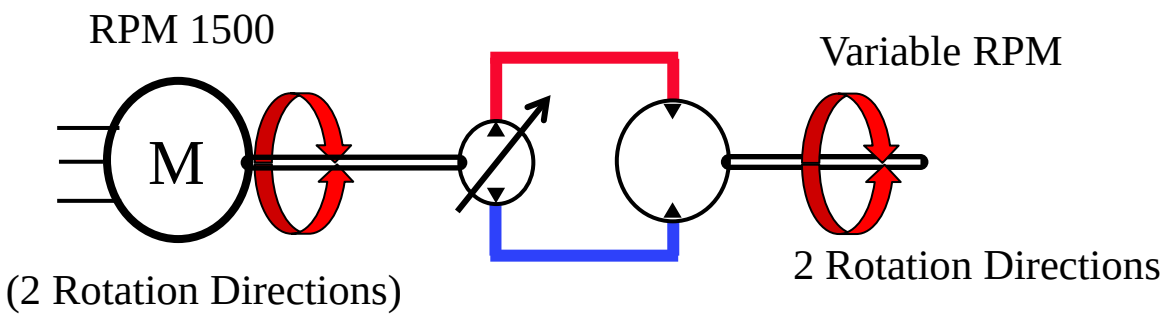

Copyright © Parker Hannifin GmbH ◦ Dr.-Ing. Gerd Scheffel 2012

Electric Drive

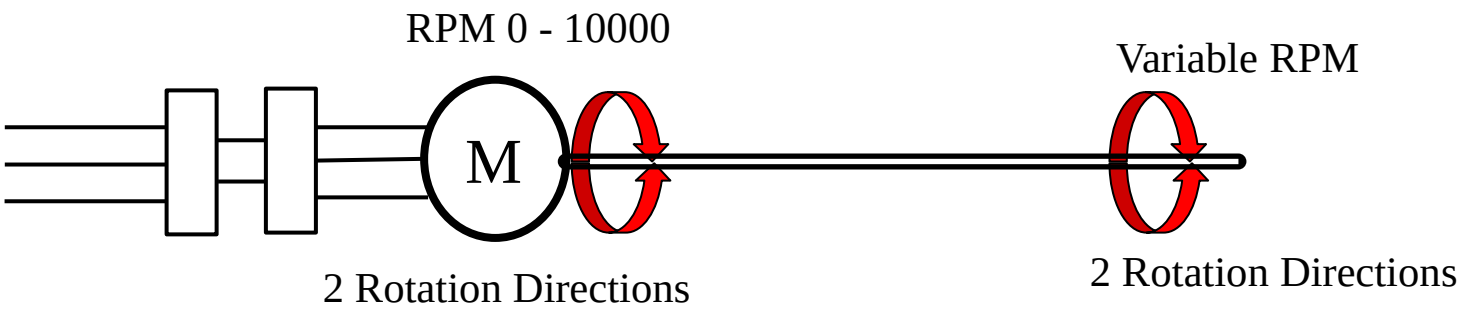

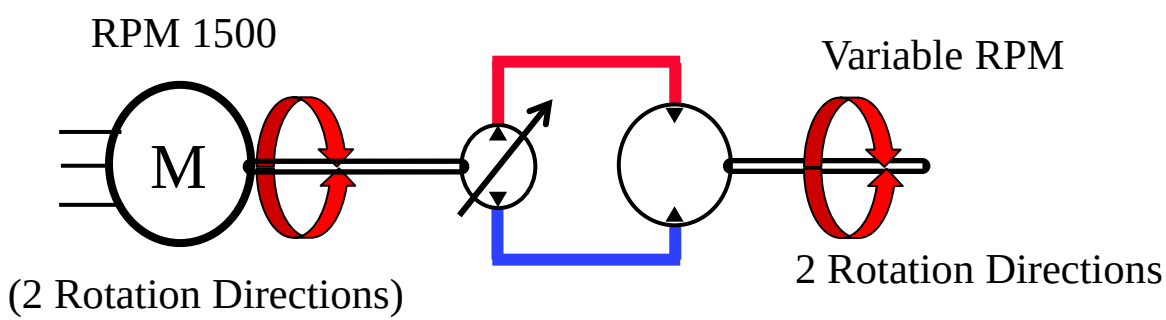

?

Copyright © Parker Hannifin GmbH ◦ Dr.-Ing. Gerd Scheffel 2012

Electric Drive

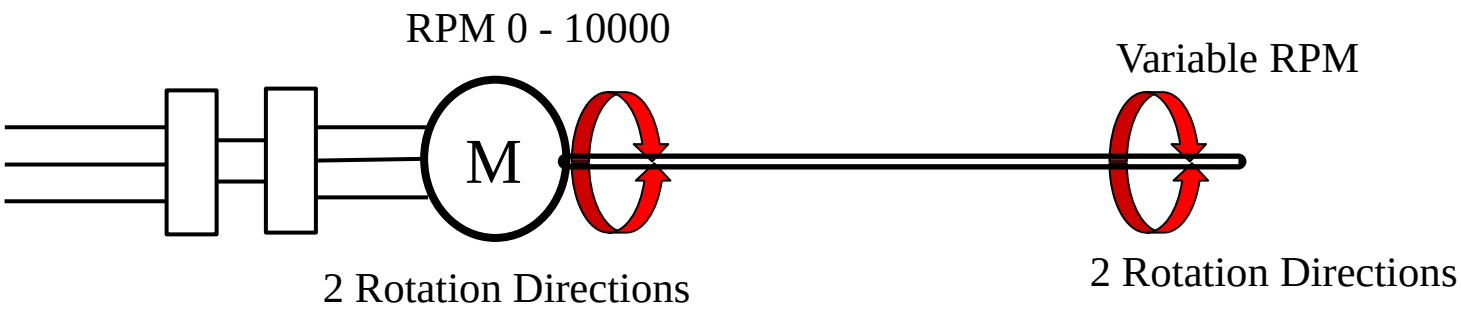

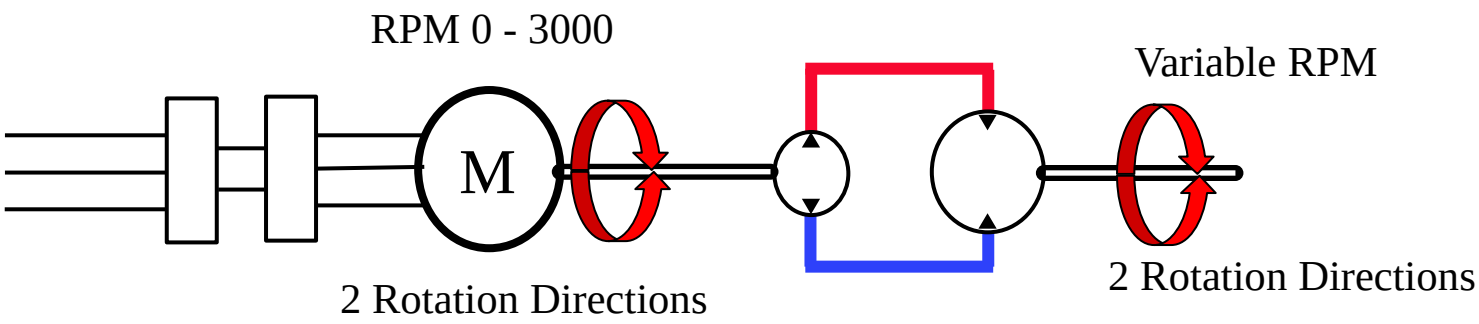

?

Copyright © Parker Hannifin GmbH ◦ Dr.-Ing. Gerd Scheffel 2012

Electric Drive – Linear Motion

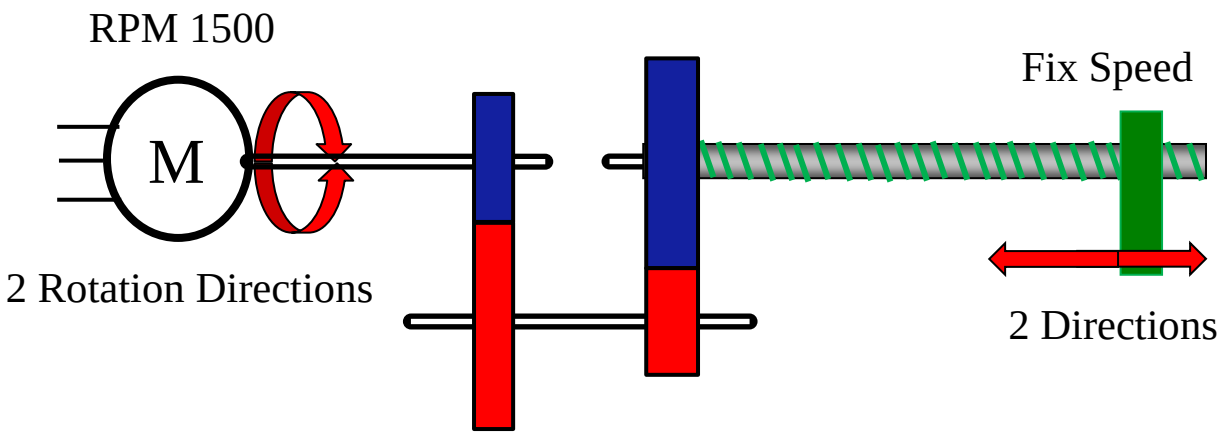

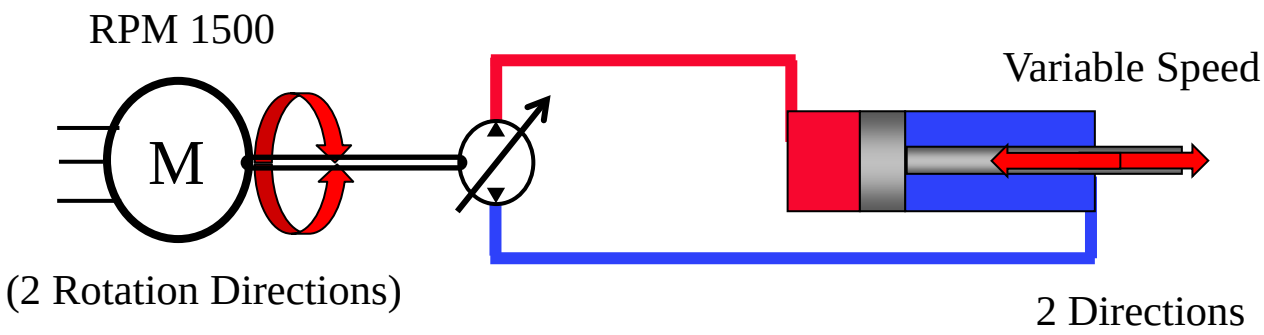

Copyright © Parker Hannifin GmbH ◦ Dr.-Ing. Gerd Scheffel 2012

Electric Drive – Linear Motion

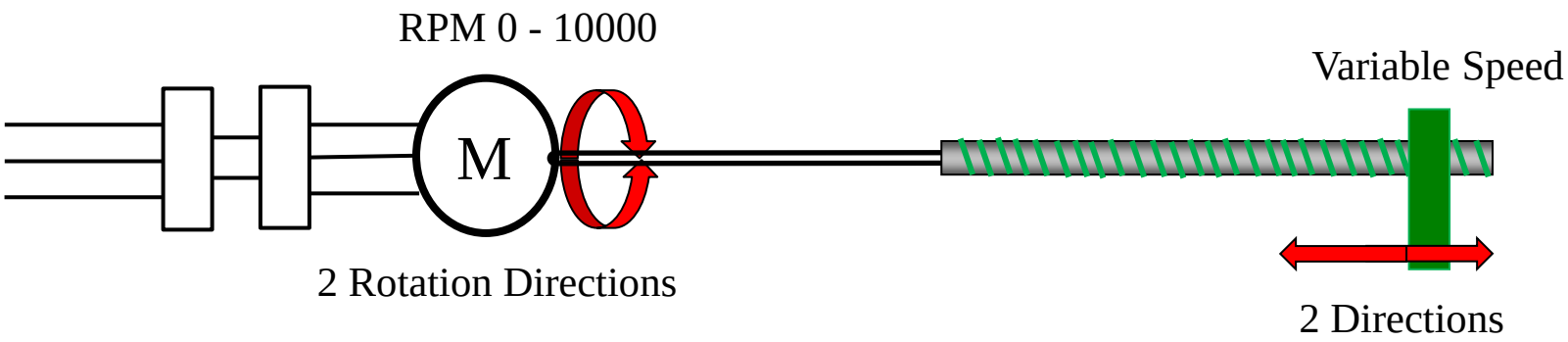

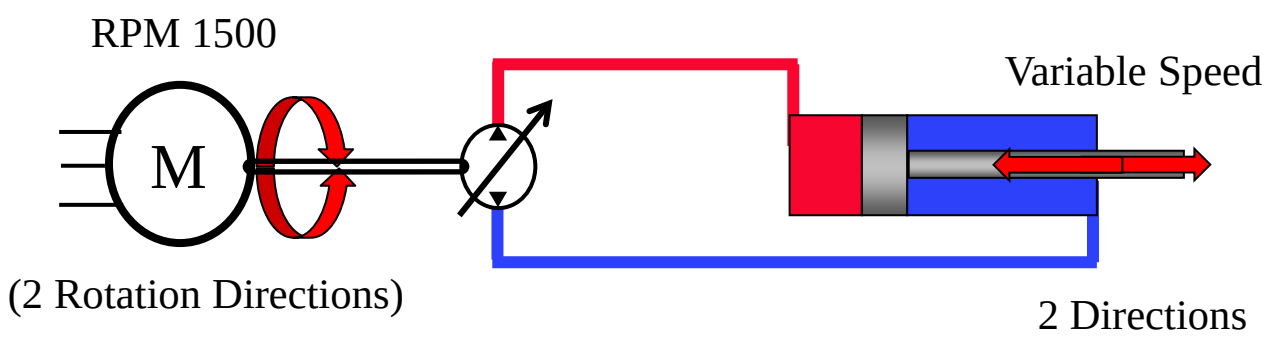

Copyright © Parker Hannifin GmbH ◦ Dr.-Ing. Gerd Scheffel 2012

Electric Drive – Linear Motion

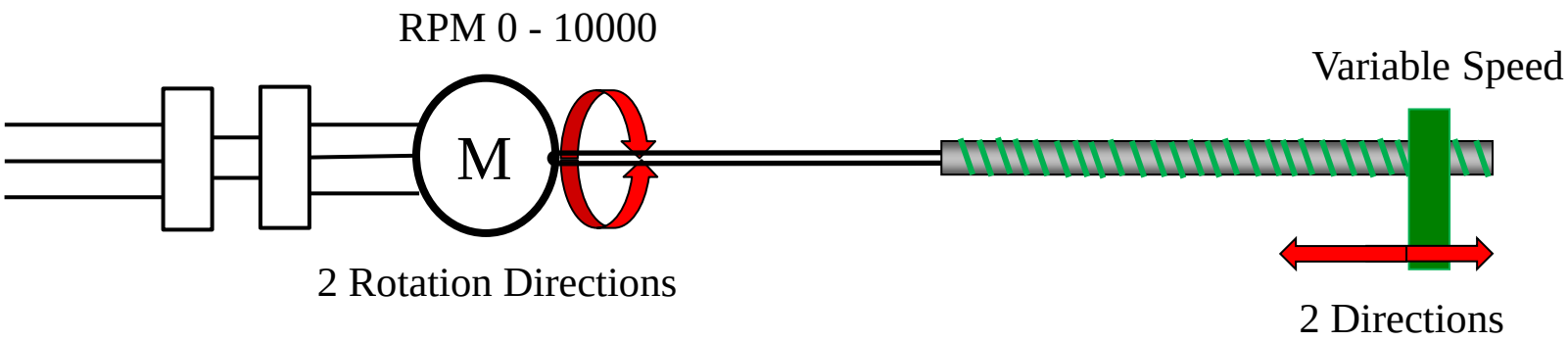

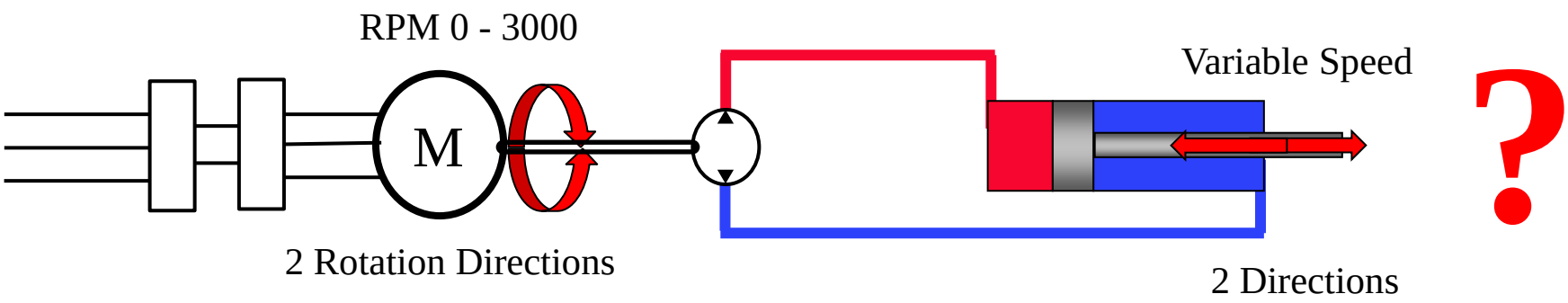

Copyright © Parker Hannifin GmbH ◦ Dr.-Ing. Gerd Scheffel 2012

Electric Drive – Linear Motion

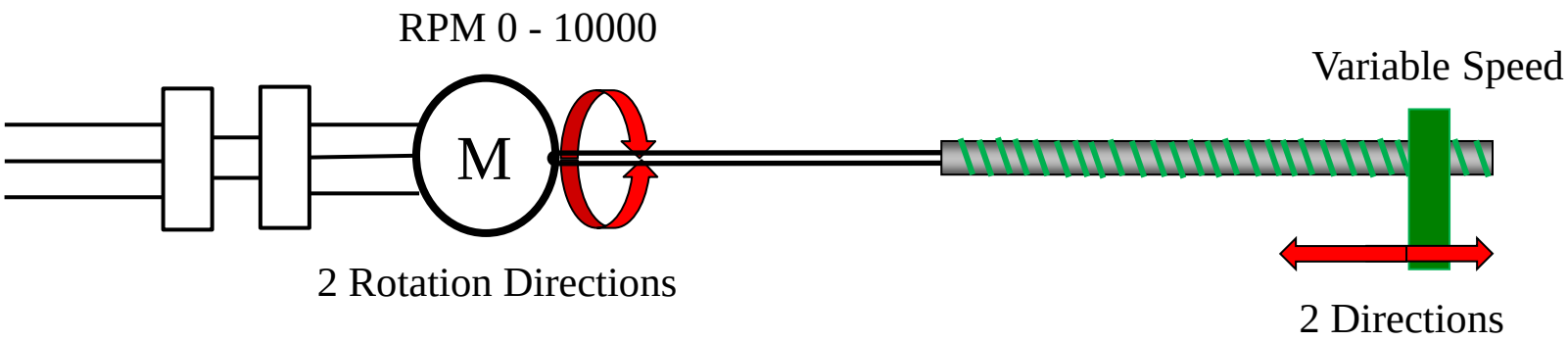

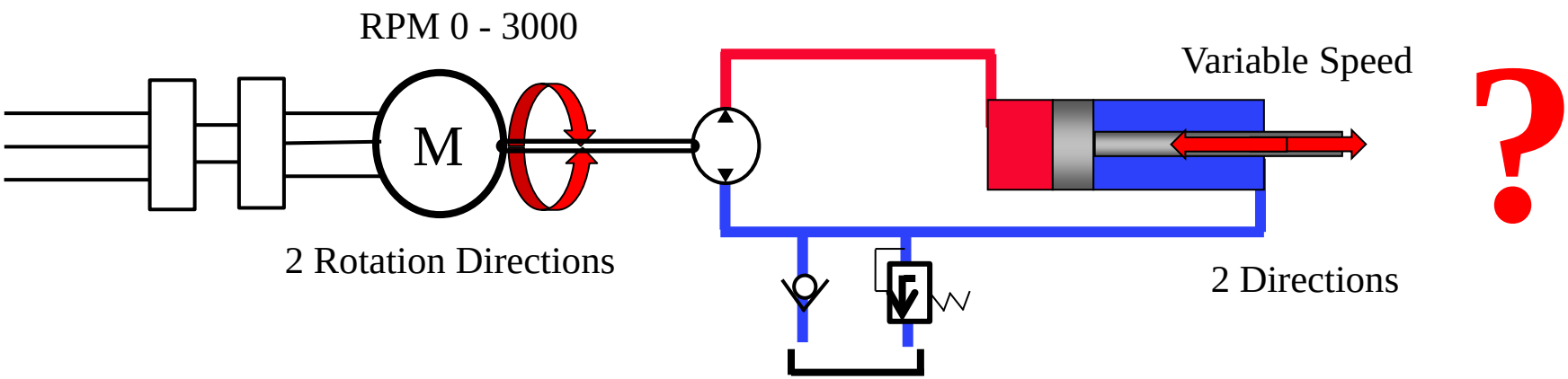

Copyright © Parker Hannifin GmbH ◦ Dr.-Ing. Gerd Scheffel 2012

Electric Drive – Linear Motion

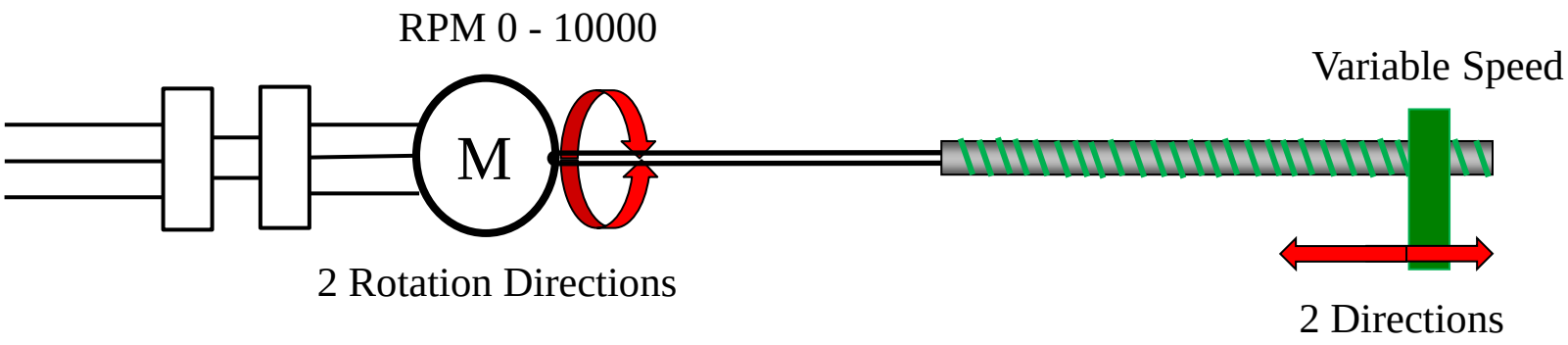

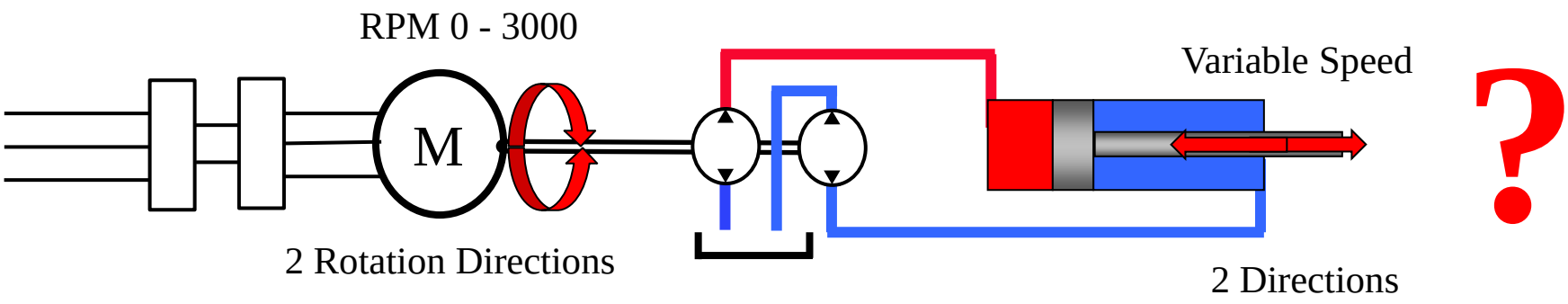

Copyright © Parker Hannifin GmbH ◦ Dr.-Ing. Gerd Scheffel 2012

Electric Drive – Linear Motion

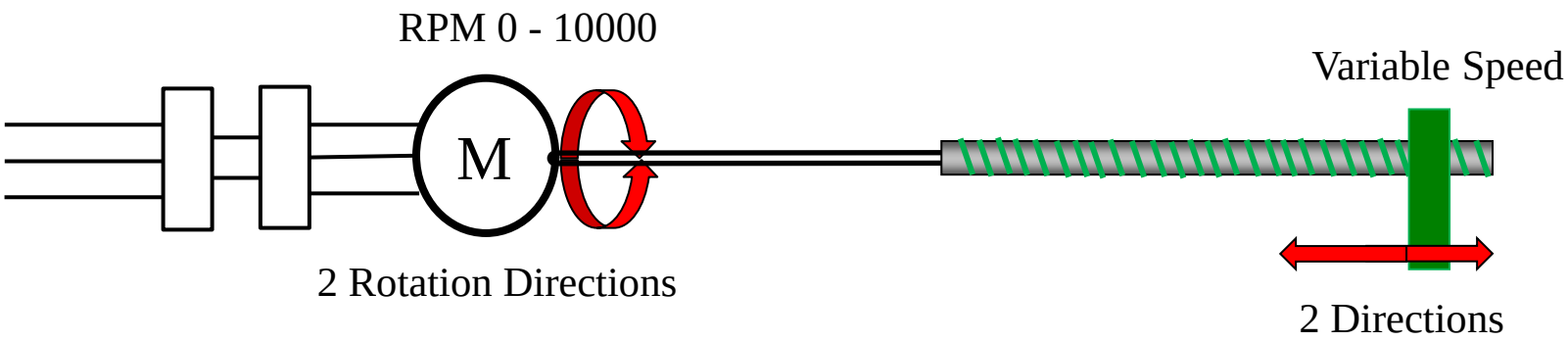

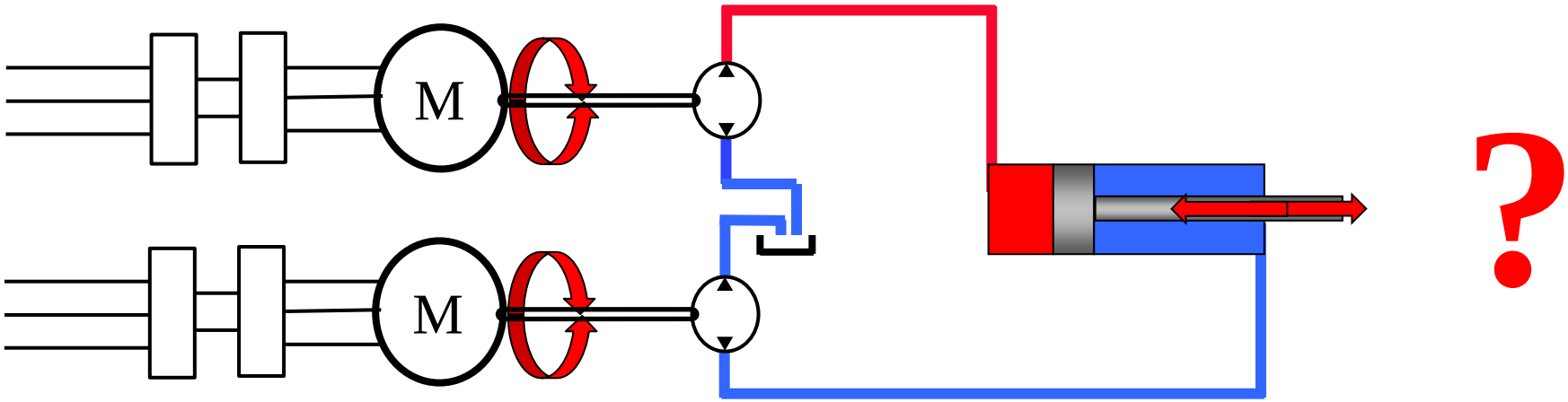

Copyright © Parker Hannifin GmbH ◦ Dr.-Ing. Gerd Scheffel 2012

Electric Drive – Multiple Motions

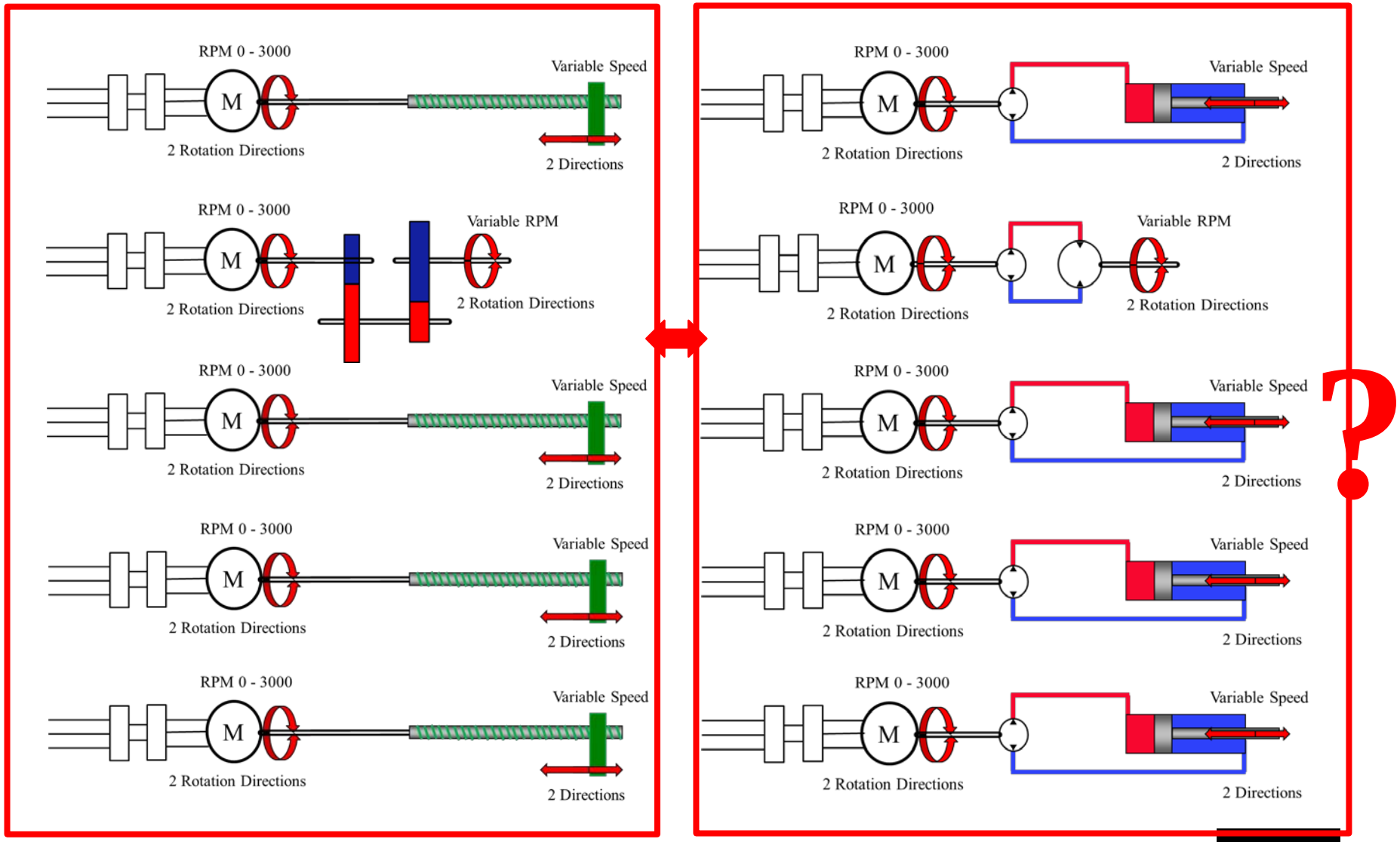

Copyright © Parker Hannifin GmbH ◦ Dr.-Ing. Gerd Scheffel 2012

Electric Drive – Multiple Motions

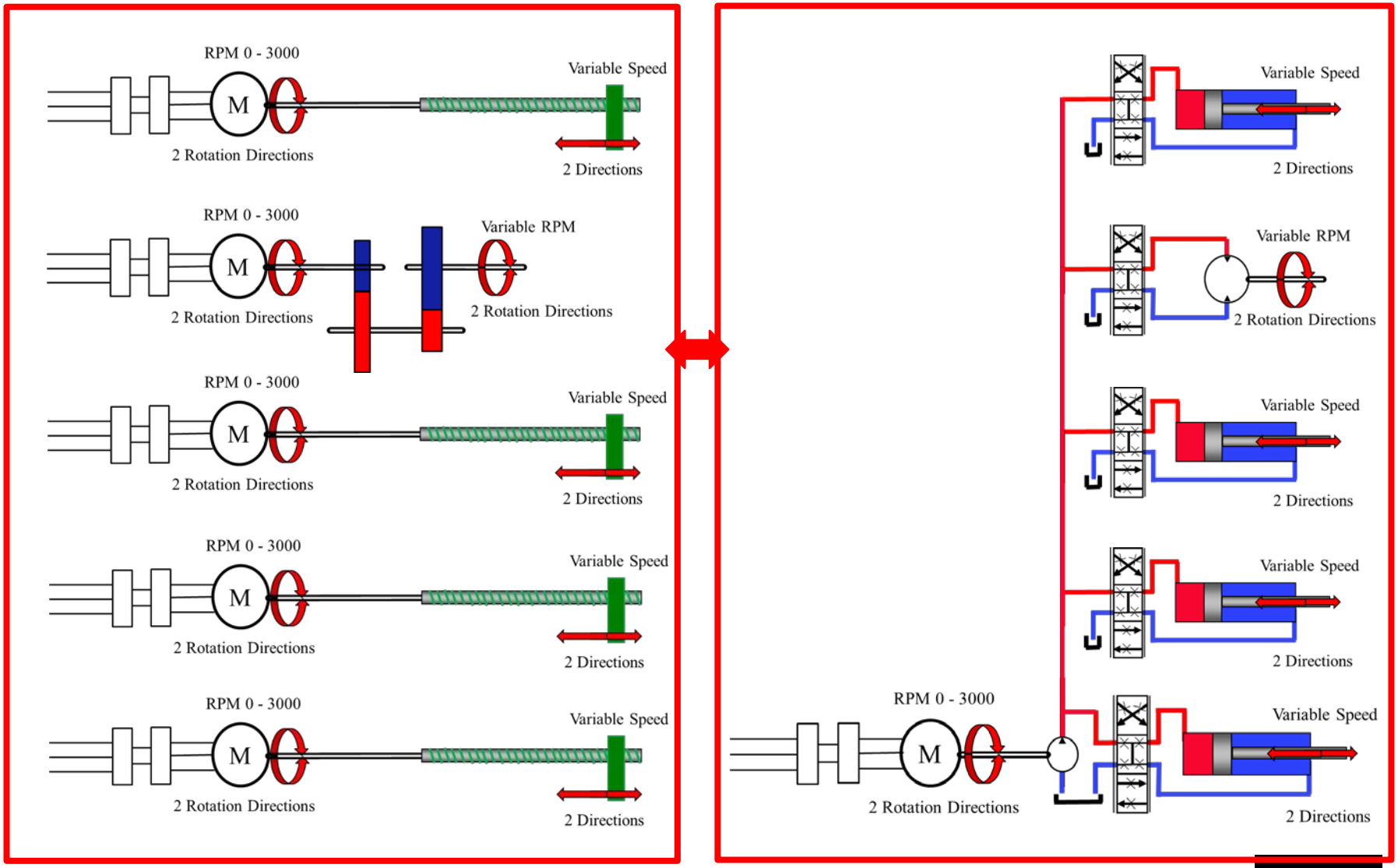

Copyright © Parker Hannifin GmbH ◦ Dr.-Ing. Gerd Scheffel 2012

Electric Drive – Multiple Motions

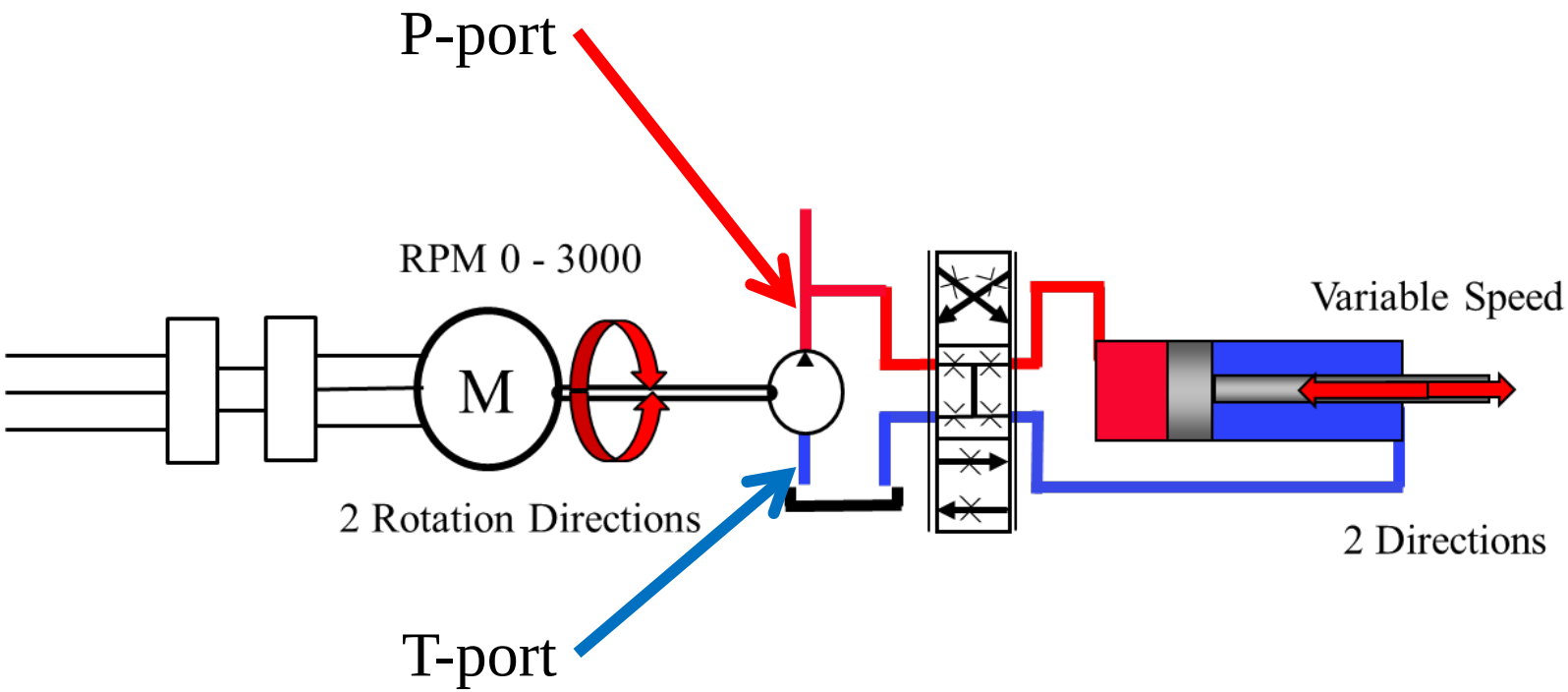

Copyright © Parker Hannifin GmbH ◦ Dr.-Ing. Gerd Scheffel 2012

Partnering w Electromechanics

World's steepest cogwheel railway

From Alpnachstad to Pilatus Kulm, the world's steepest cogwheel railway winds up through lush meadows carpeted with Alpine flowers, past sparkling mountain streams and fascinating rock faces.

Technische Daten

Section	Alpnachstad – Pilatus Kulm
Opened	4 June 1889 (steam operation)
Reopened	15 May 1937 (after electrification)
Operating period	May to November
Height difference	1635 m
Length of track	4618 m
Travel speed	Ascent 9–12 km/h, descent max. 9 km/h
Travel time	Ascent 30 min., descent 40 min.
Maximum passenger transport capacity	340 persons per hour
Railcar capacity	10 railcars, 40 persons each
Transport system	Locher cogwheel railway system
Driving power	210 PS or 154 kW per locomotive
Track	Gauge: 0.8 m, Gradient: 48% maximum, 38% average
Manufacturers	Locher General Building Contractors www.locher-ag.ch, Carriage SLM Schweizerische Lokomotiv- & Maschinenfabrik of Winterthur

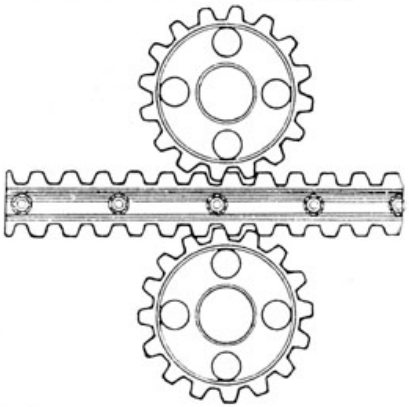

Copyright © Parker Hannifin GmbH ◦ Dr.-Ing. Gerd Scheffel 2012

16 Motors x 500kW = 8 MW Power

Induction Motor

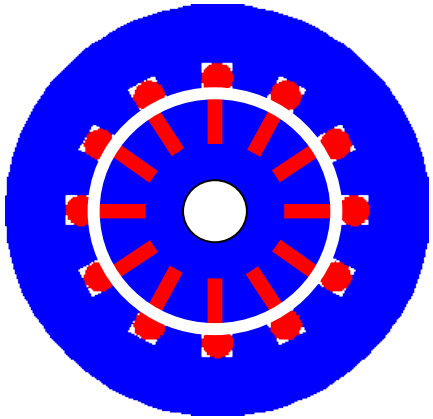

Square Frame Induction Motor w improved Dynamics

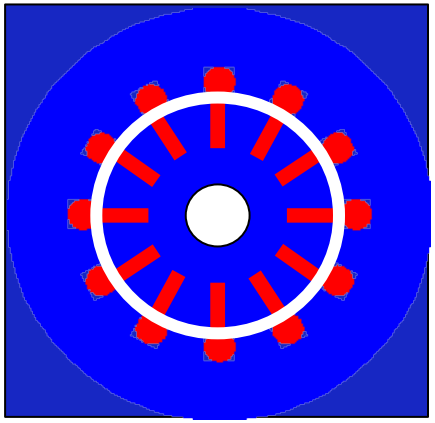

Permanent Magnet Motor

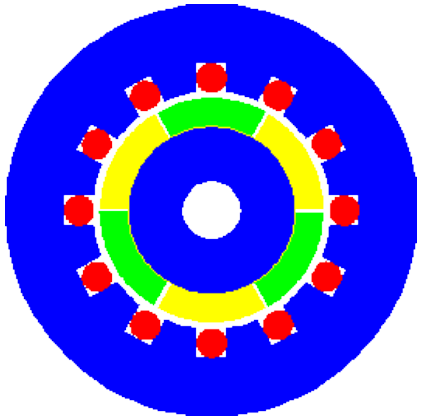

Reluctance Motor

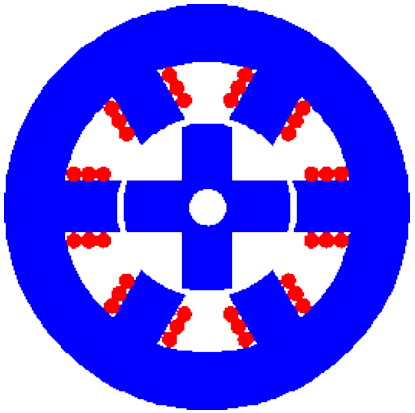

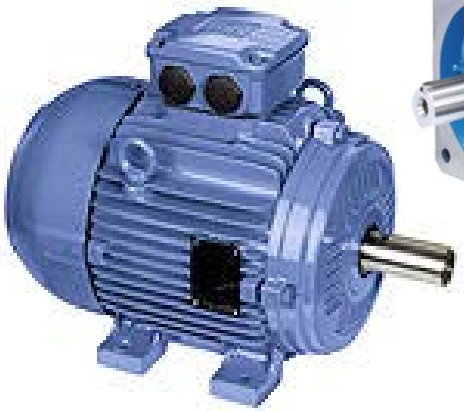

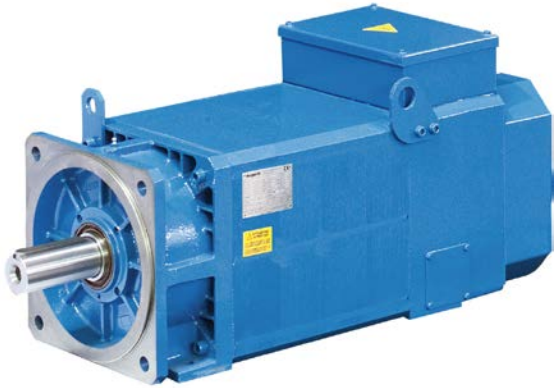

Next Generation

Copyright © Parker Hannifin GmbH ◦ Dr.-Ing. Gerd Scheffel 2012

Electric Drive – Linear Motion

Copyright © Parker Hannifin GmbH ◦ Dr.-Ing. Gerd Scheffel 2012

Electric Drive

Gearbox Elimination

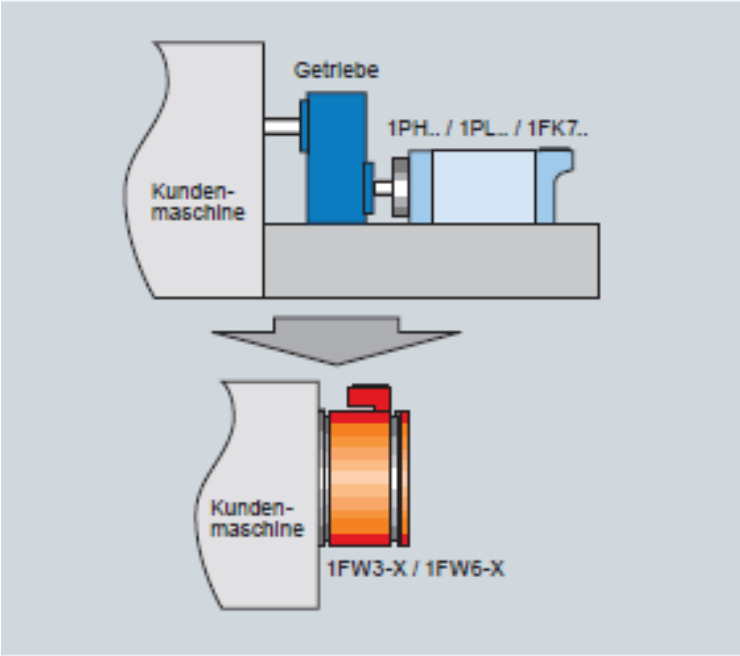

Conversion Rotation to Linear

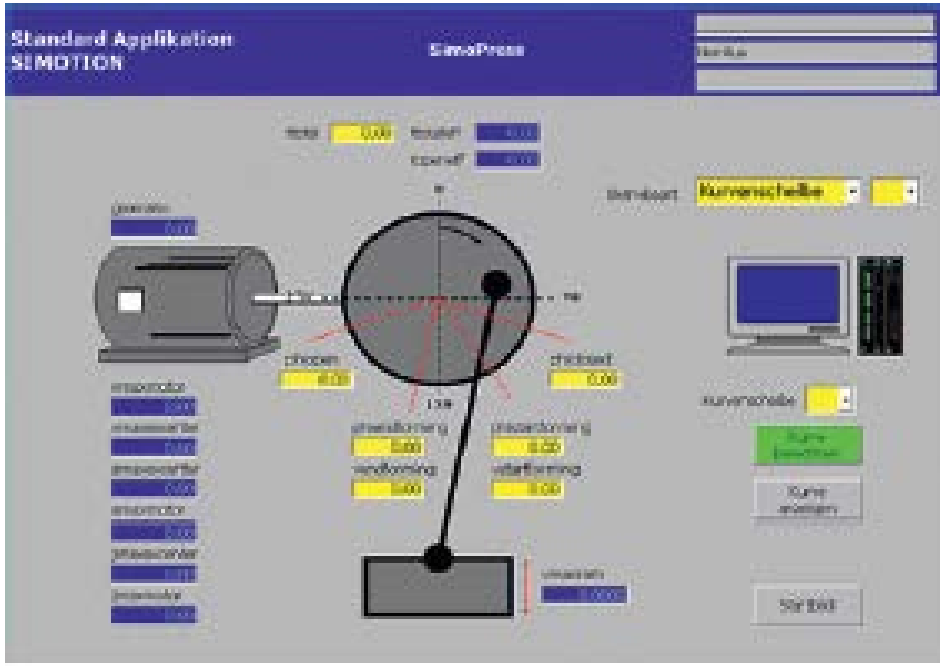

Copyright © Parker Hannifin GmbH ◦ Dr.-Ing. Gerd Scheffel 2012

Application examples

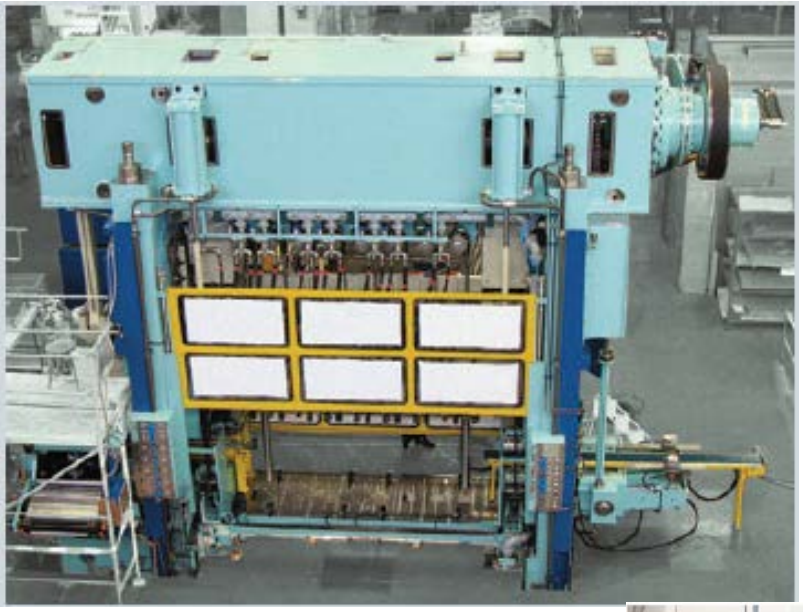

■ Burkhardt GmbH, Deutschland

Mit der Kraft zweier Servos

Burkhardt baut eine 320-Tonnen-Servopresse mit zwei Torquemotoren, Motion Controller und Sicherheitssteuerung von Siemens »

■ S. Dunkes GmbH, Deutschland

Beeindrucke

Application examples

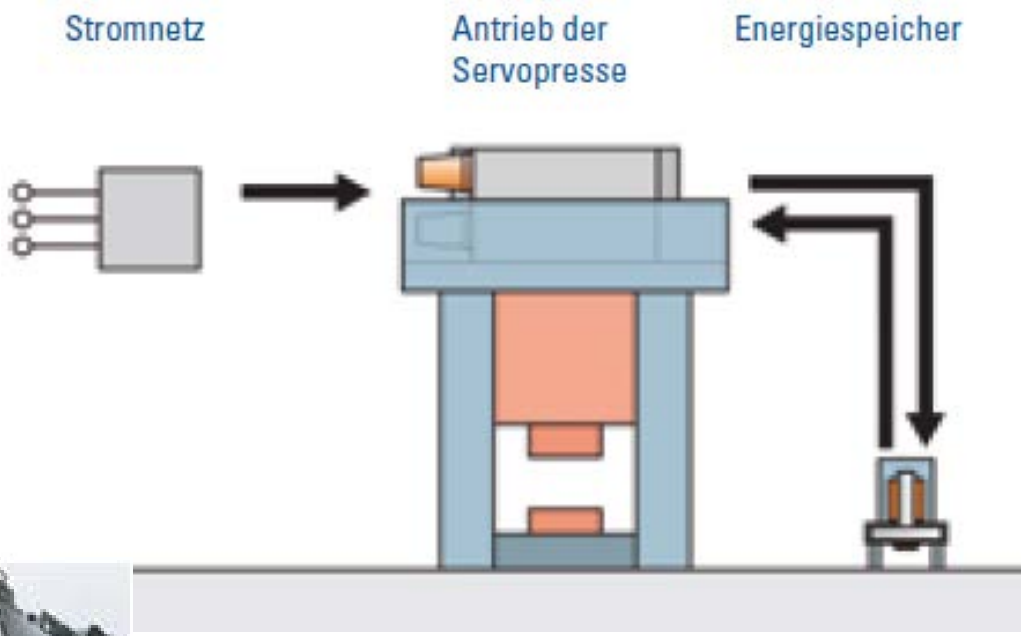

Peak Power = 1MW

Formteil	Betriebsart	Presskraft [kN]	Ziehtiefe [mm]	Max. Hubzahl konventionell	Max. Hubzahl Servo	Steigerung auf
Gasgeneratorhalter	Folgeverbund	1.300	60	25	40	160 %
Flansch	Folgeverbund	1.200	30	30	56	187 %
Käfig	Folgeverbund	2.400	50	30	50	167 %
Halter	Folgeverbund	2.000	40	30	60	200 %
Querblech	Folgeverbund	4.000	90	23	33	143 %
Mittelkonsole	Transfer	6.000	190	12	17	142 %
Einsatzkopf	Transfer	6.300	130	8	15	187 %

Copyright © Parker Hannifin GmbH ◦ Dr.-Ing. Gerd Scheffel 2012

Electric Drive – Single Linear Motion

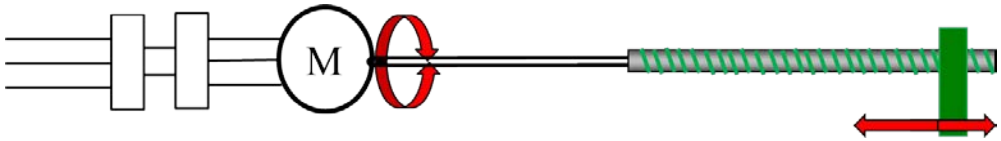

Copyright © Parker Hannifin GmbH ◦ Dr.-Ing. Gerd Scheffel 2012

Electric Drive – Linear Motion

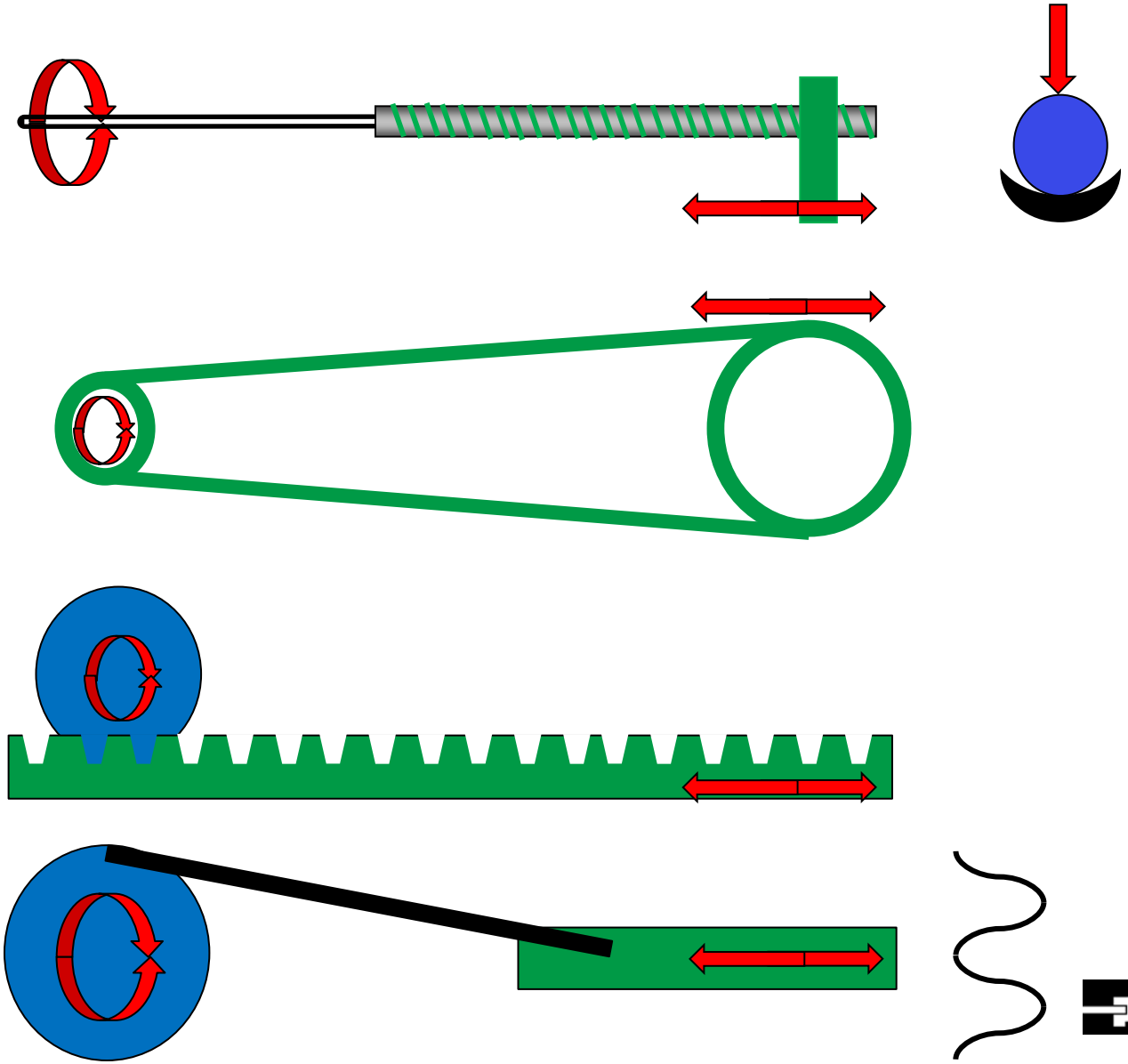

Copyright © Parker Hannifin GmbH ◦ Dr.-Ing. Gerd Scheffel 2012

Electric Drive – Linear Motion

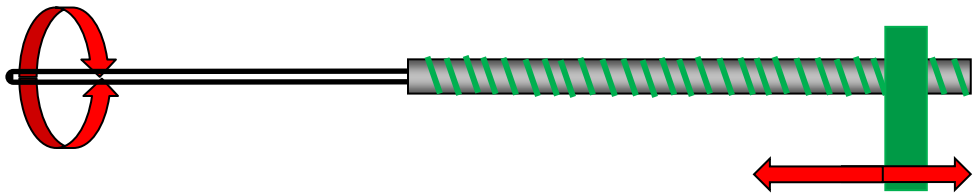

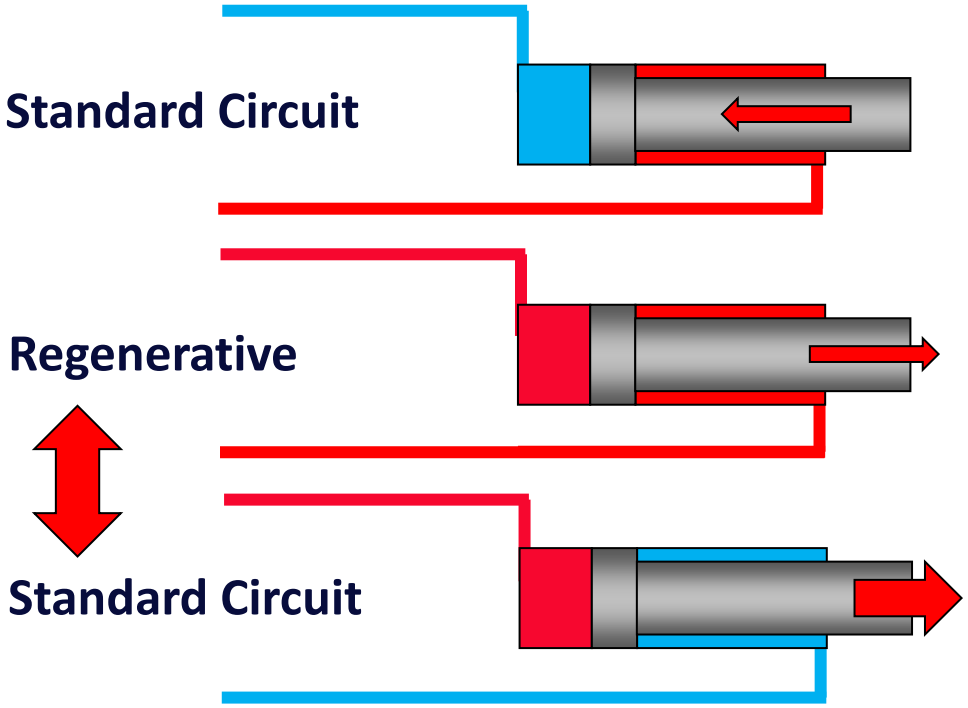

Cylinder Ratio 2:1

Copyright © Parker Hannifin GmbH ◦ Dr.-Ing. Gerd Scheffel 2012

A-Regenerative

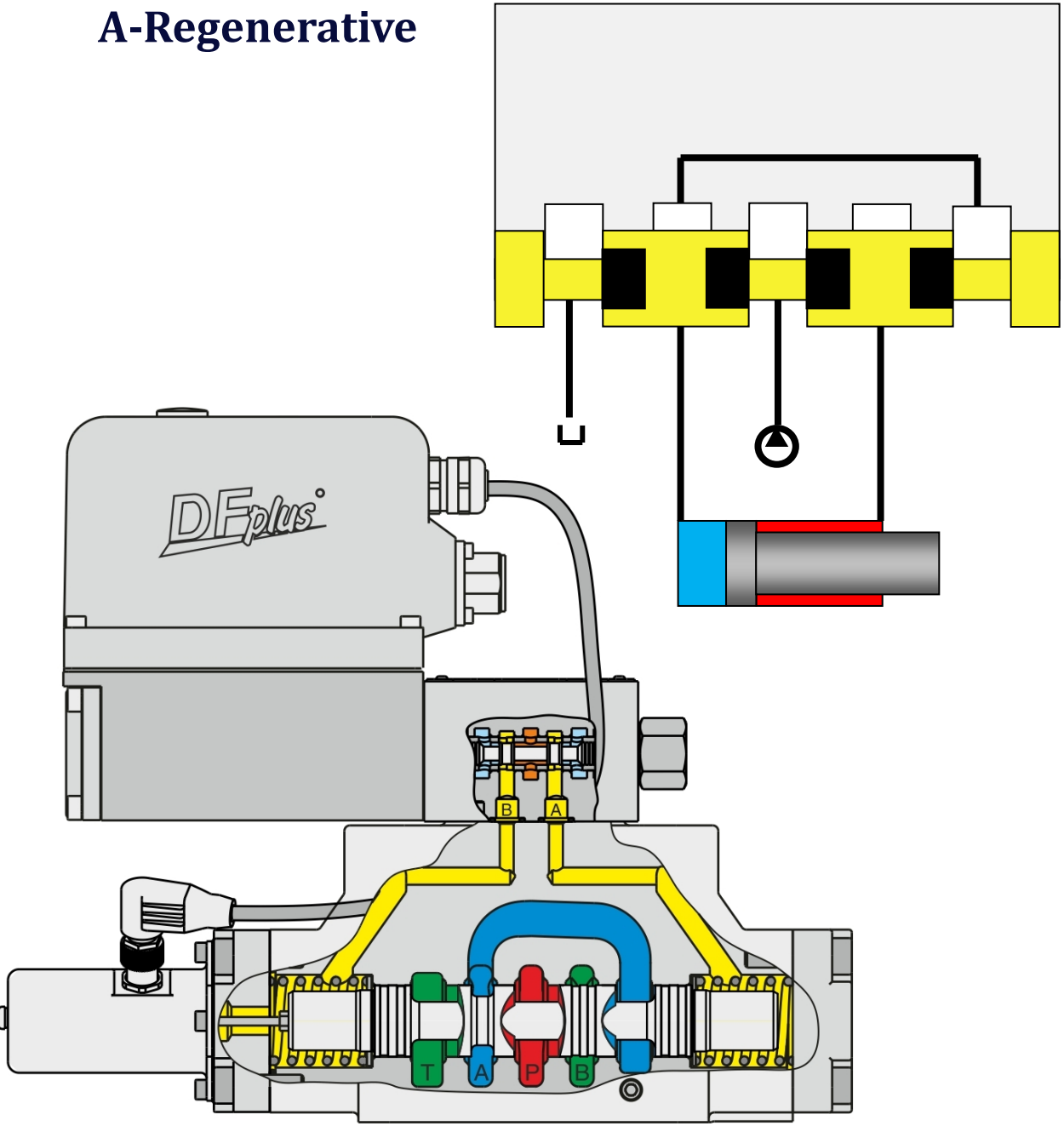

Copyright © Parker Hannifin GmbH ◦ Dr.-Ing. Gerd Scheffel 2012

A-Regenerative

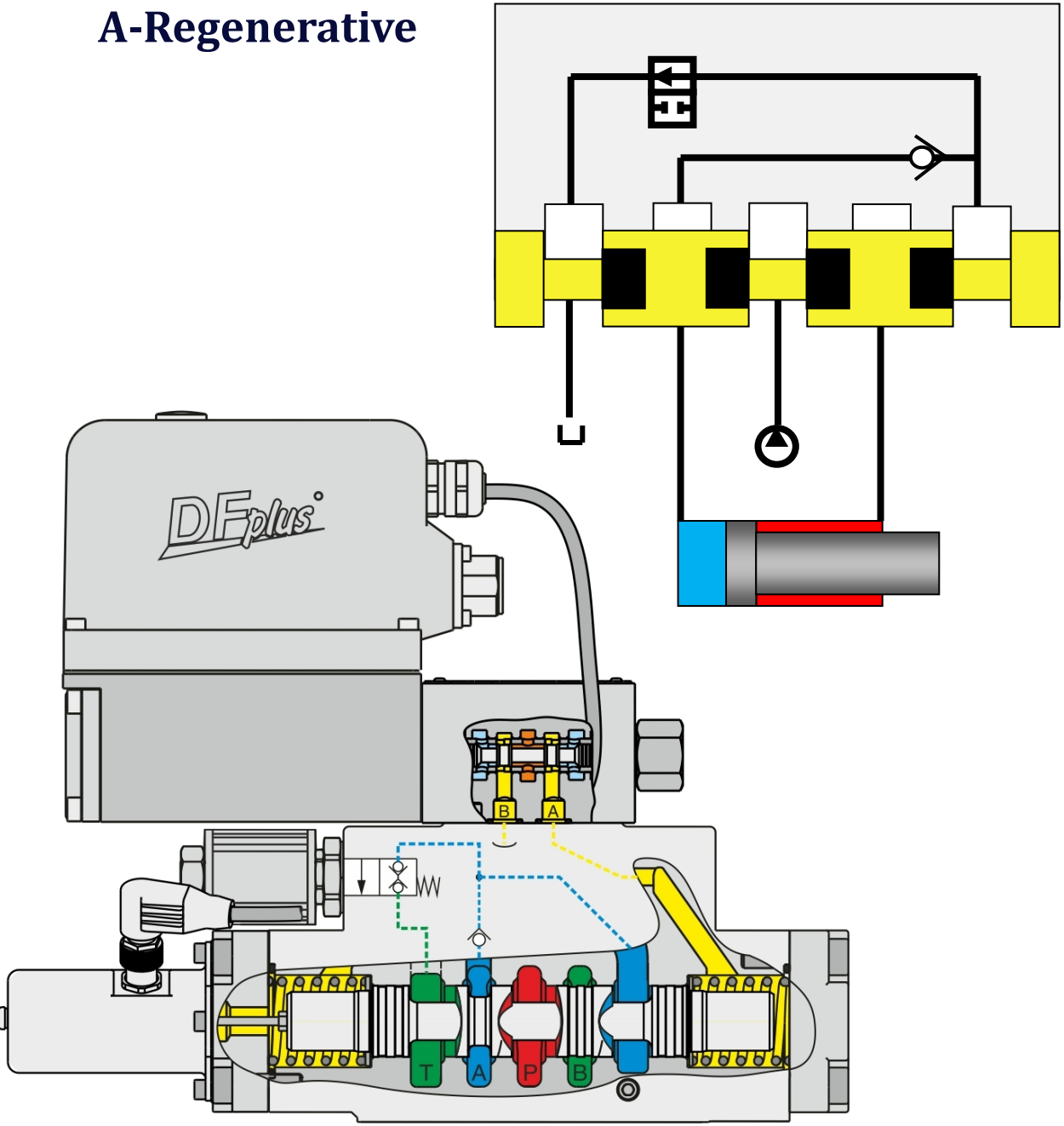

Copyright © Parker Hannifin GmbH ◦ Dr.-Ing. Gerd Scheffel 2012

400 bar
50 l/min

Copyright © Parker Hannifin GmbH ◦ Dr.-Ing. Gerd Scheffel 2012

Electricity turns our World

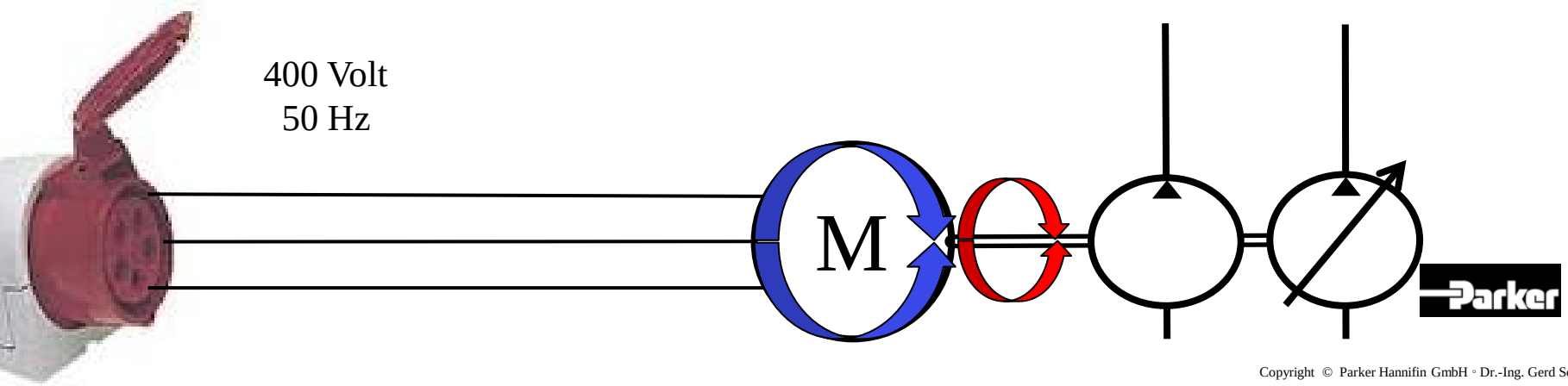

Copyright © Parker Hannifin GmbH ◦ Dr.-Ing. Gerd Scheffel 2012

# Pole	Field RPM	Motor RPM
8	900	855
6	1200	1140
4	1800	1710
2	3600	3420

Revolutions per Minute

Induction Motor

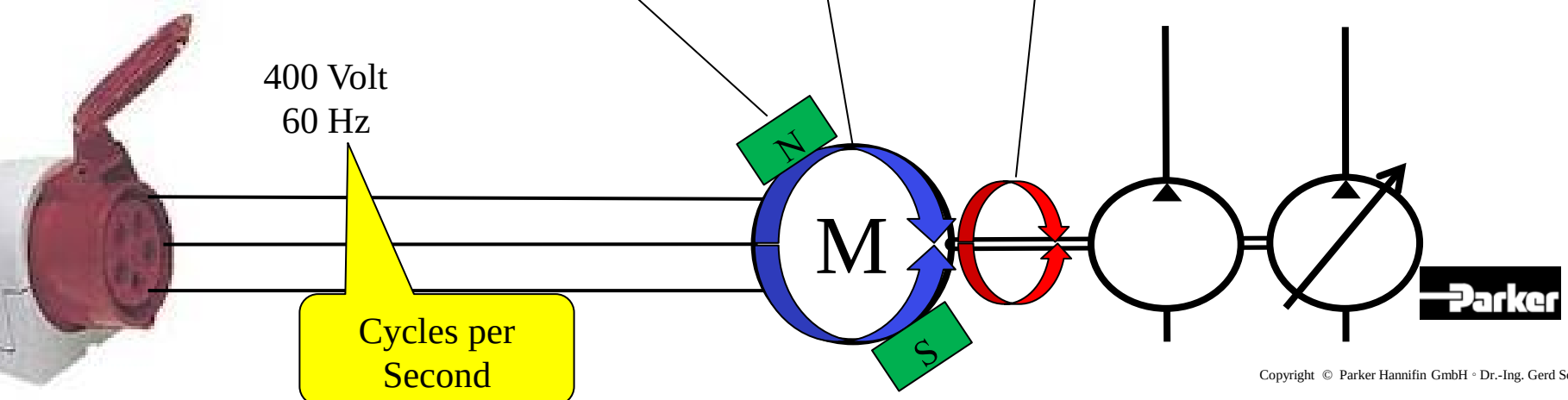

Copyright © Parker Hannifin GmbH ◦ Dr.-Ing. Gerd Scheffel 2012

Induction Motor

# Pole	Inverter RPM	
8	0 - 1800	
6	0 - 2400	
4	0 - 3600	1500/2000/2500 Diesel
2	0 - 7200	

RPM too low

RPM too high, Torque too low

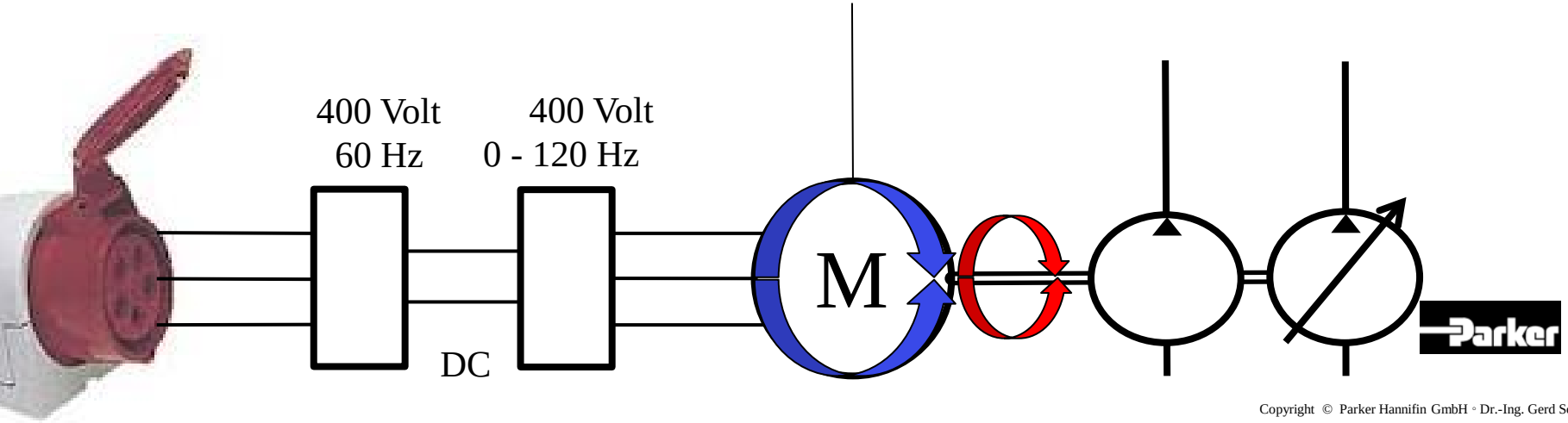

Copyright © Parker Hannifin GmbH ◦ Dr.-Ing. Gerd Scheffel 2012

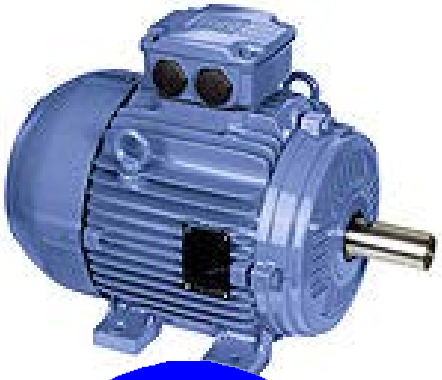

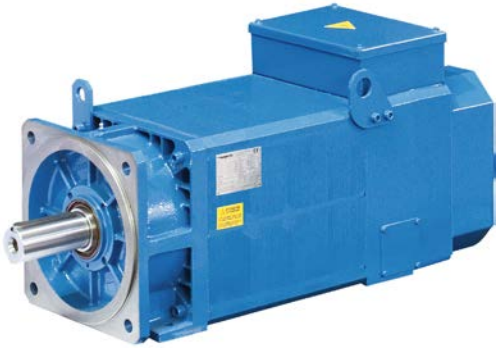

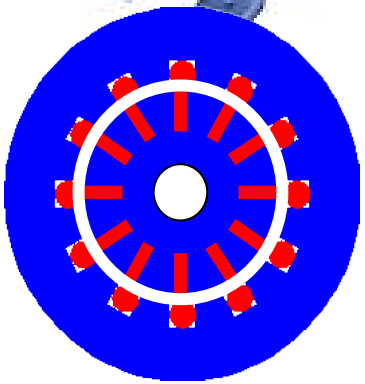

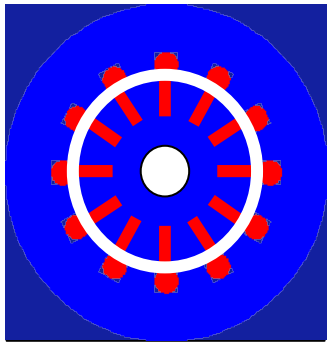

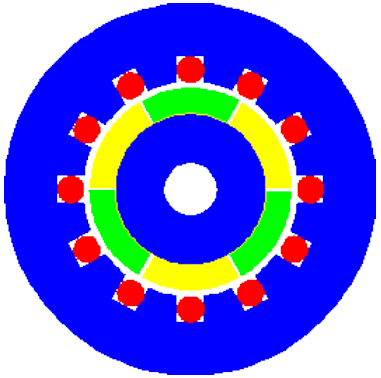

Induction Motor

- Low Cost
- < 1000 kW

Permanent Magnet Motor

- Turns w Field RPM
- Higher Torque @ given Size
- Better Efficiency
- Servo = closed Loop for highest Dynamics
- < 85 kW

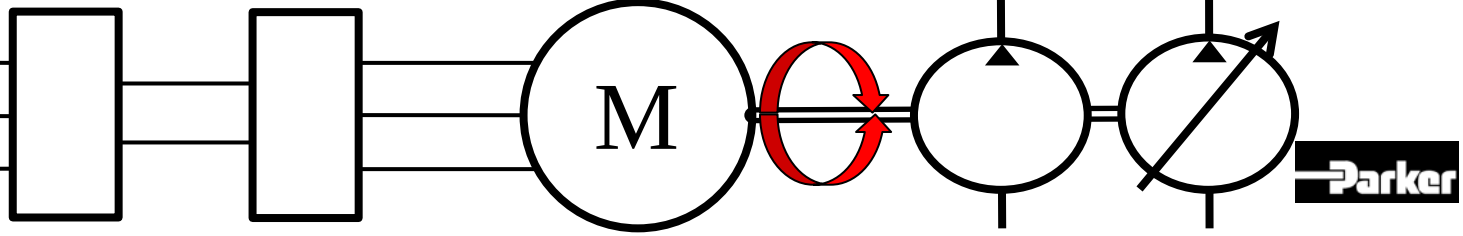

Copyright © Parker Hannifin GmbH ◦ Dr.-Ing. Gerd Scheffel 2012

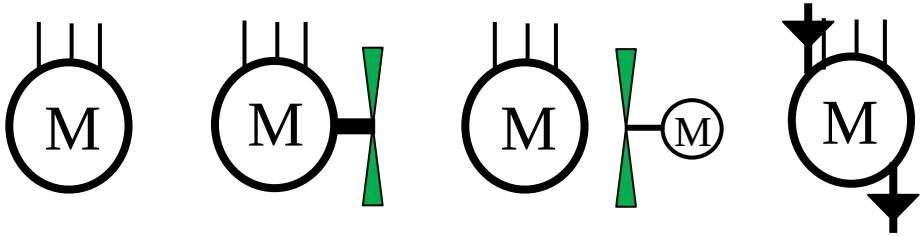

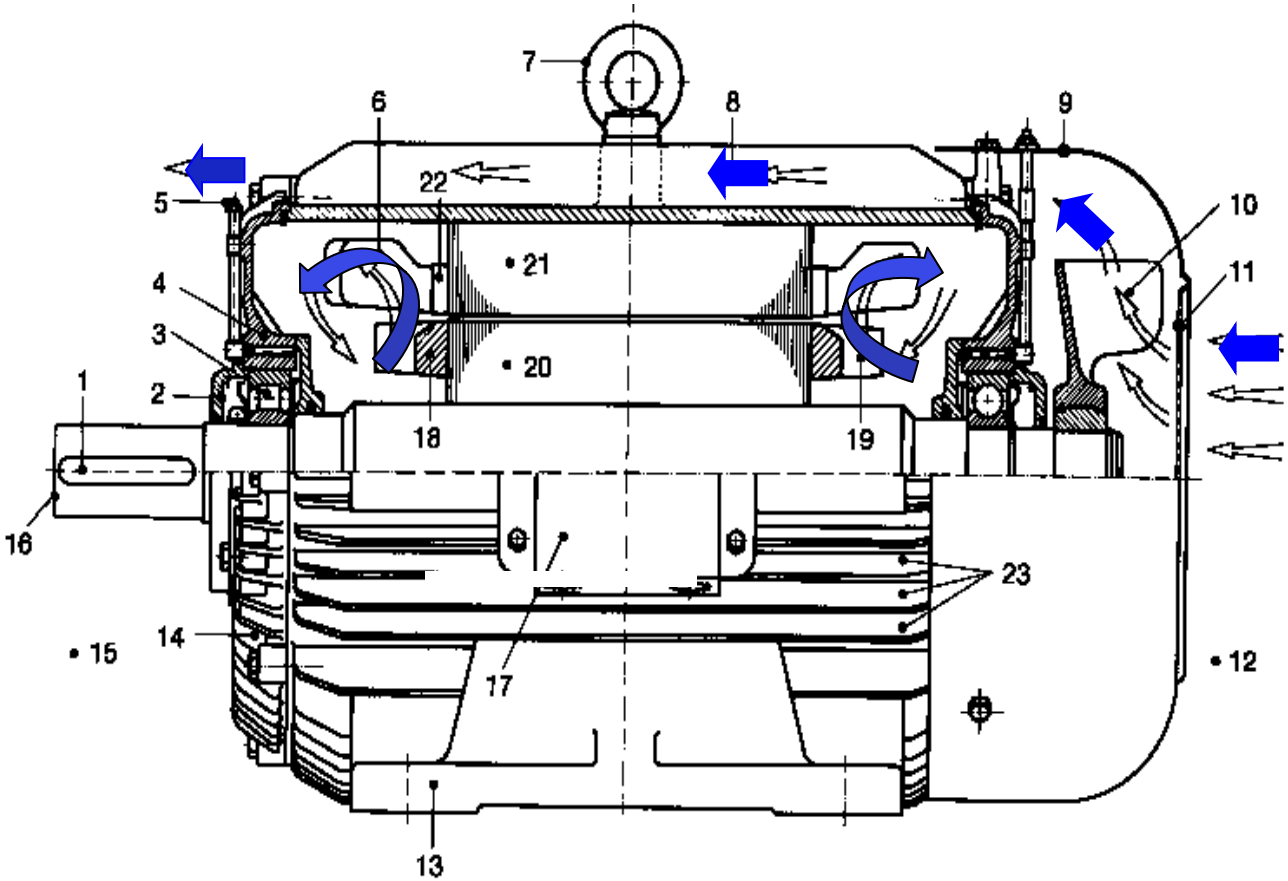

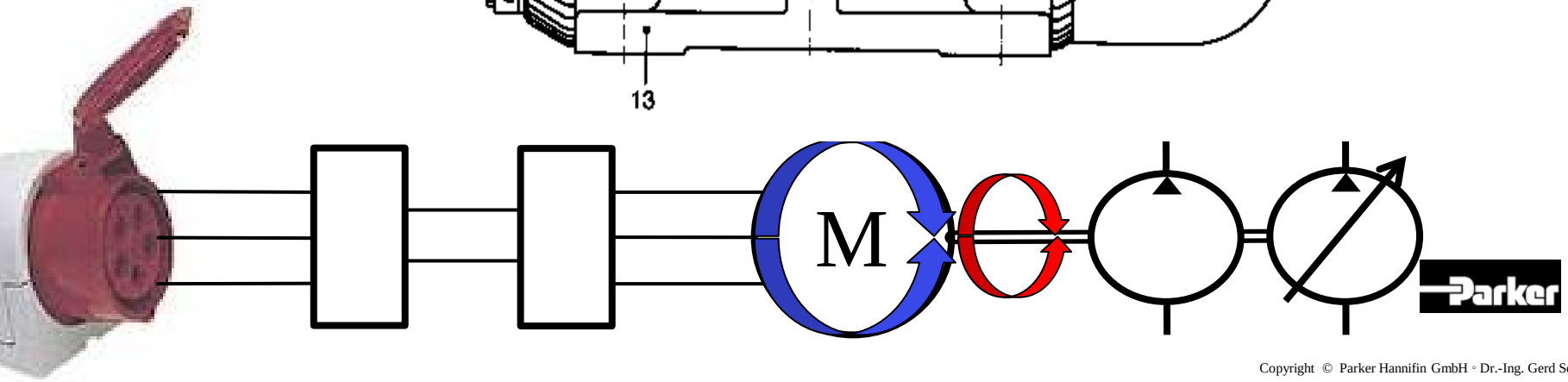

Copyright © Parker Hannifin GmbH ◦ Dr.-Ing. Gerd Scheffel 2012

Displacement	Gear		Vane	Piston		
	External	Internal		Inline	Bent Axis	Radial
	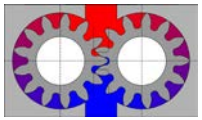	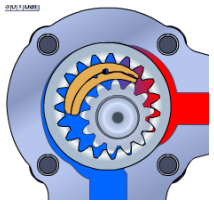	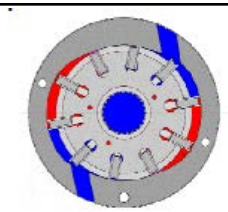	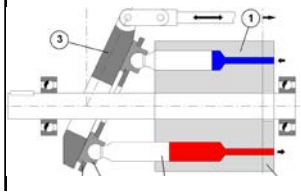	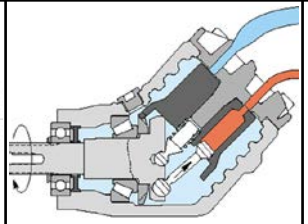	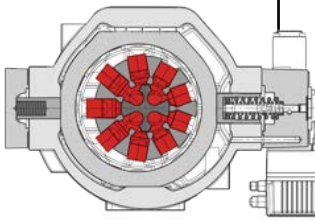
ccm	RPM @ max pressure					
10	n/a	250-3000	300-3000	400-3000	50-4200	500-2800
50	n/a	250-2400	300-3000	400-2800	50-2800	500-2100
100	n/a	250-2200	300-3000	400-2300	50-2300	500-1800
250	n/a	250-2000	300-2200	400-1800	50-1500	n/a

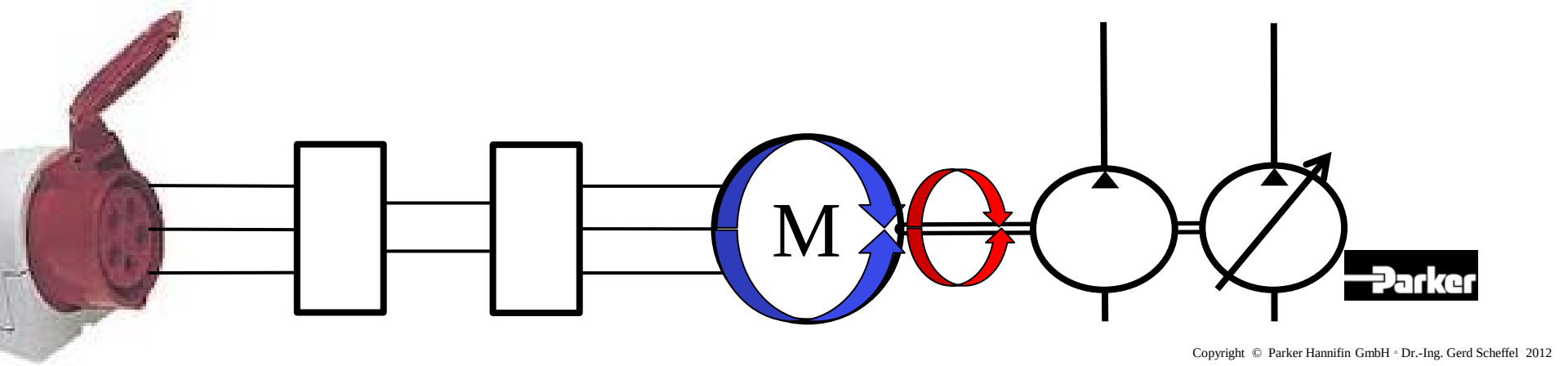

Copyright © Parker Hannifin GmbH ◦ Dr.-Ing. Gerd Scheffel 2012

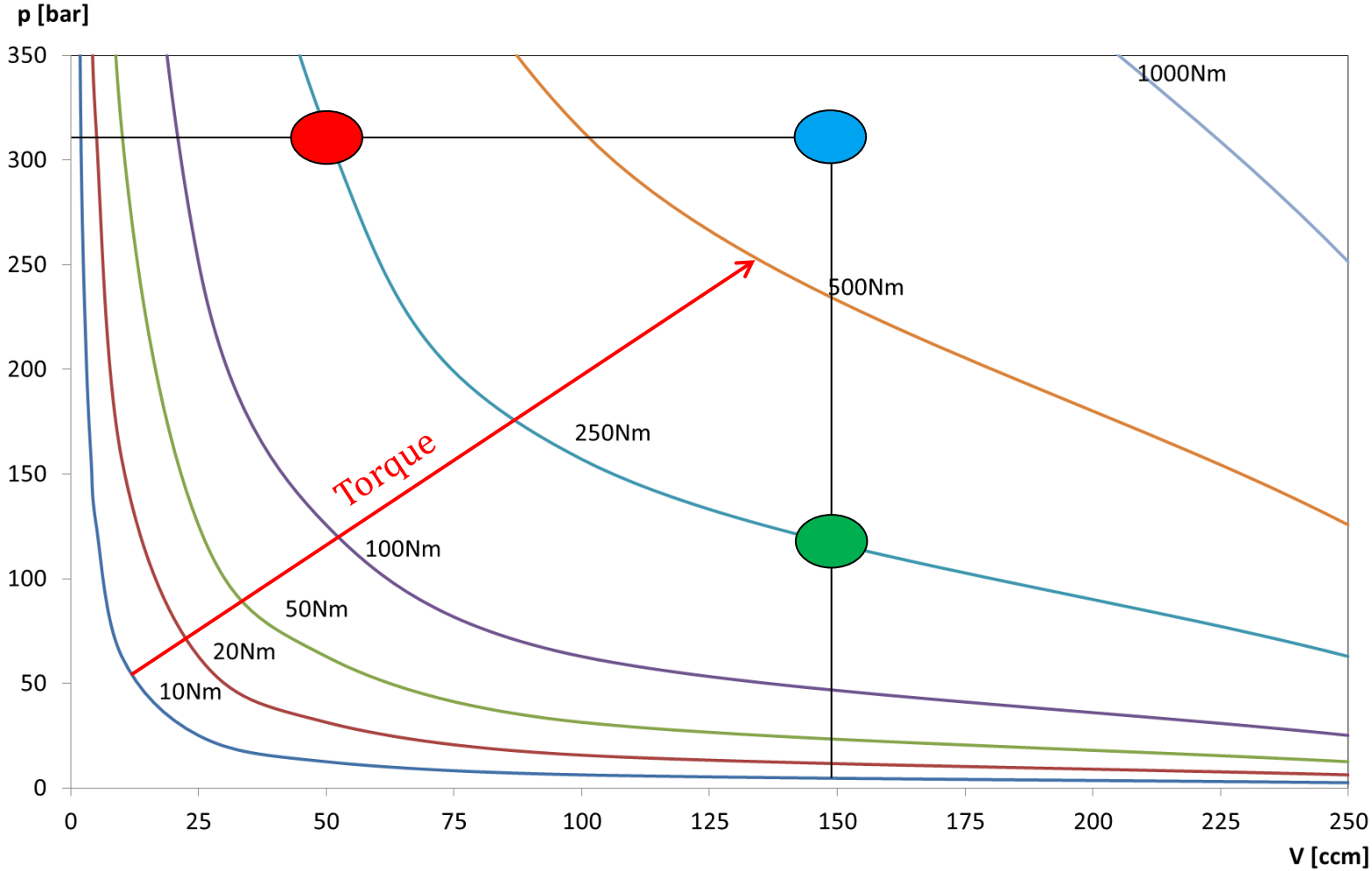

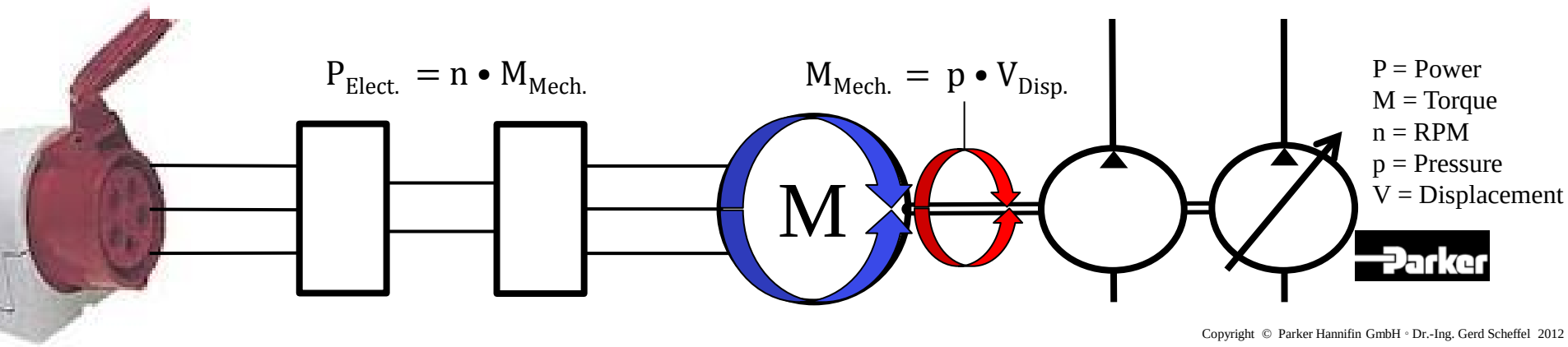

Copyright © Parker Hannifin GmbH ◦ Dr.-Ing. Gerd Scheffel 2012

- < 50 ccm w Motor controlling p & Q
- Reverse Rotation for Decompression
- High Bearing Load
- Not repairable

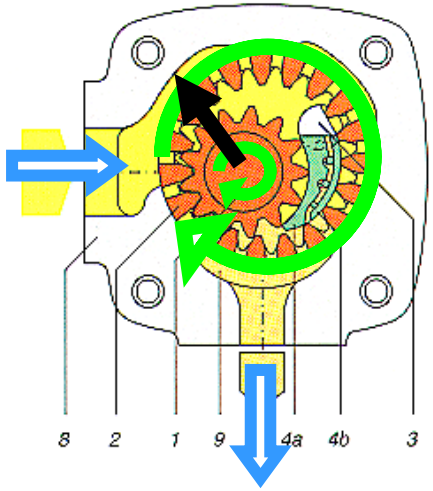

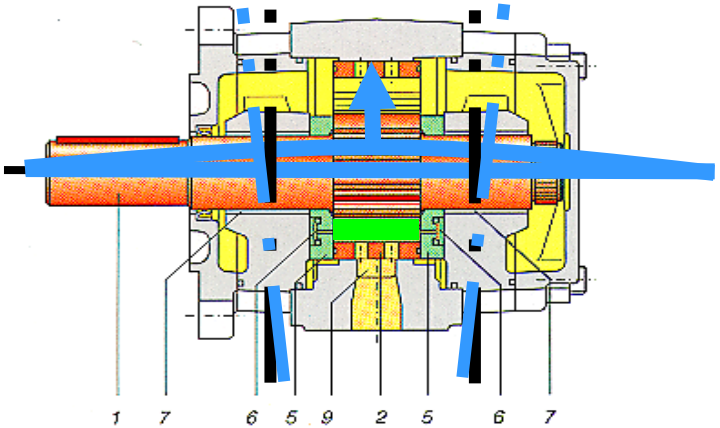

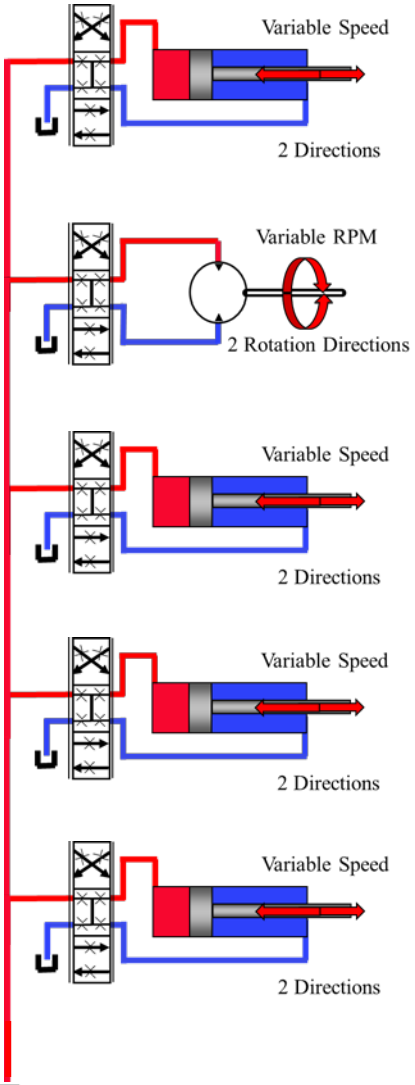

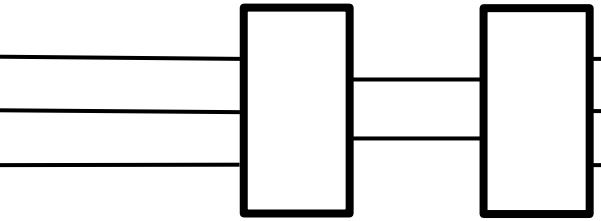

Frequency Inverter

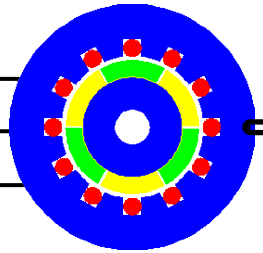

Permanent Magnet Motor

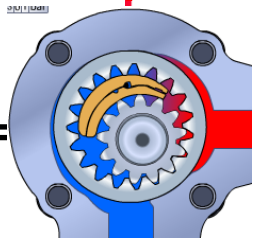

Internal Gear

Copyright © Parker Hannifin GmbH ◦ Dr.-Ing. Gerd Scheffel 2012

- > 50 ccm w Motor controlling Q and Pressure Relief

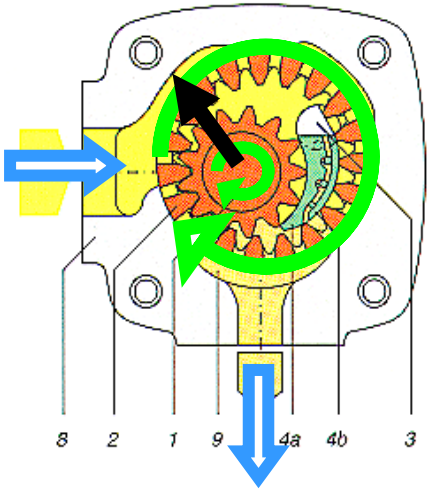

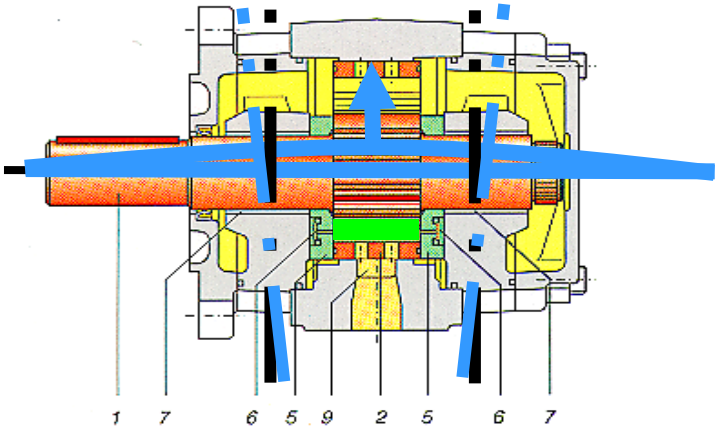

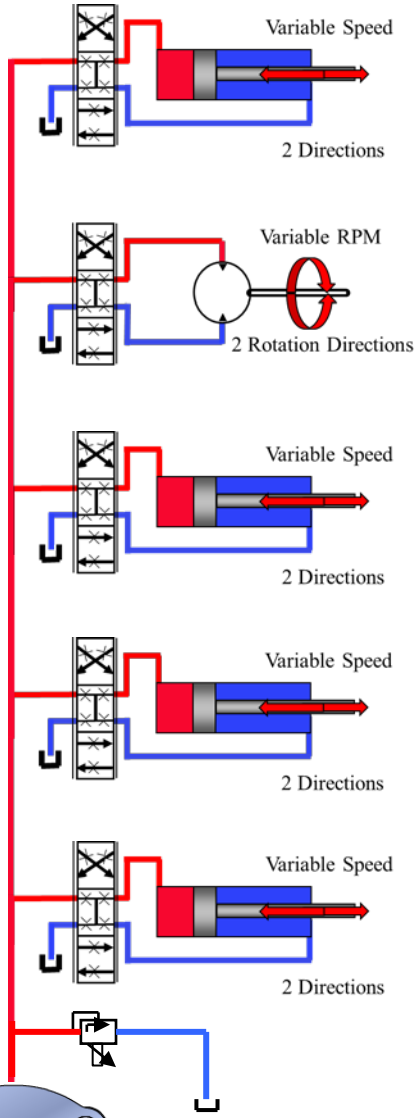

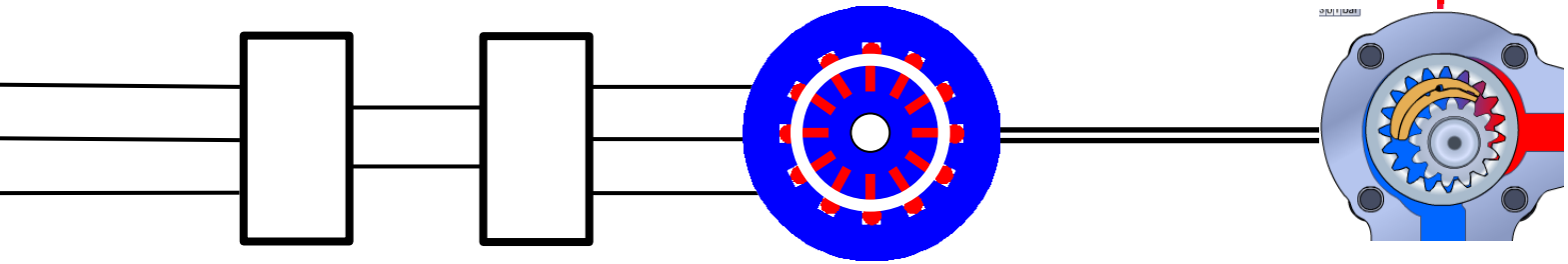

Frequency Inverter

Induction Motor

Internal Gear

Copyright © Parker Hannifin GmbH ◦ Dr.-Ing. Gerd Scheffel 2012

- < 50 ccm w Motor controlling p & Q
- Reverse Rotation for Decompression
- No Bearings
- Easy Repair through Cartridge Exchange

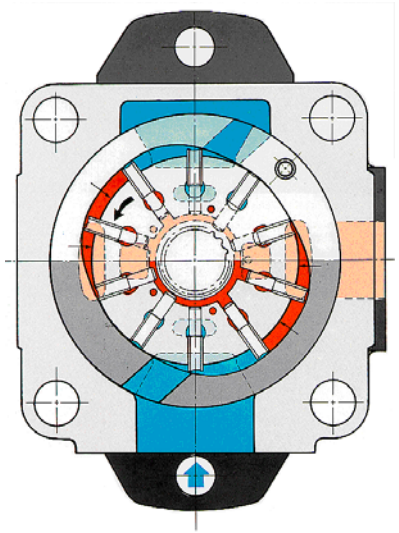

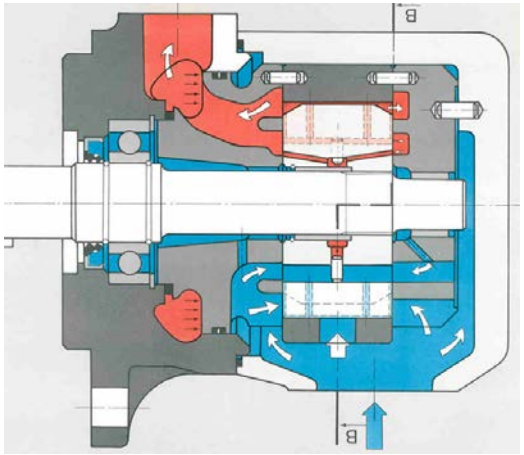

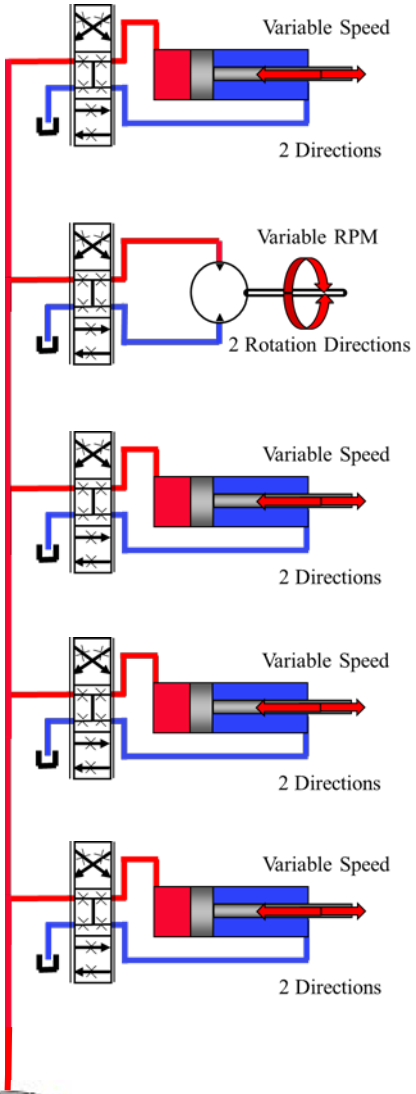

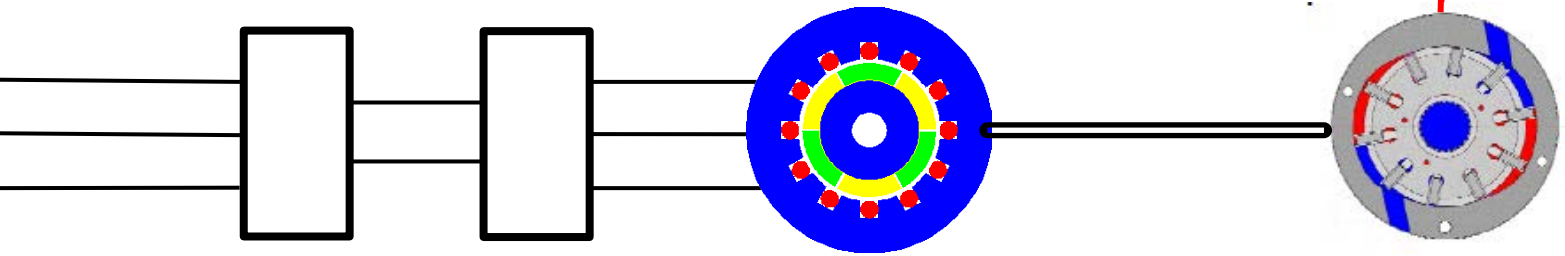

Frequency Inverter Permanent Magnet Motor Vane

Copyright © Parker Hannifin GmbH ◦ Dr.-Ing. Gerd Scheffel 2012

- < 50 ccm w Motor controlling p & Q
- Reverse Rotation for Decompression
- No Bearings
- Easy Repair through Cartridge Exchange

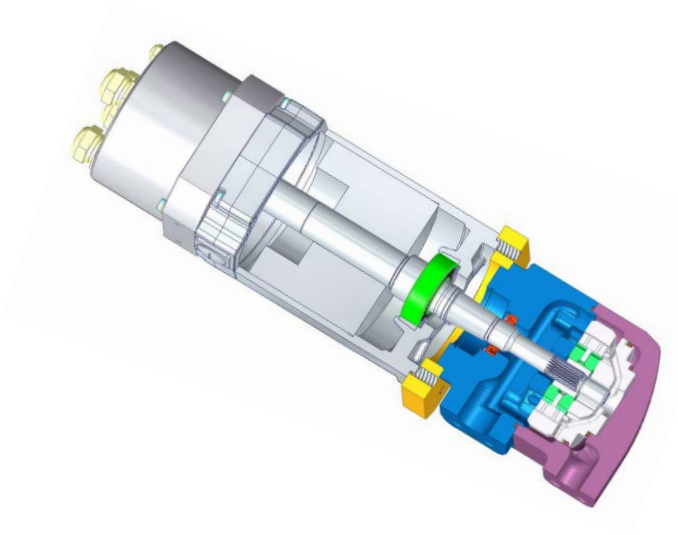

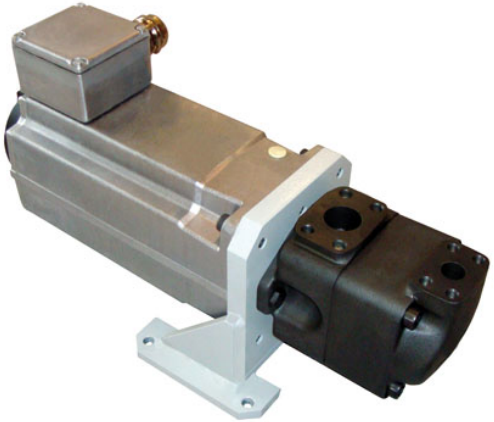

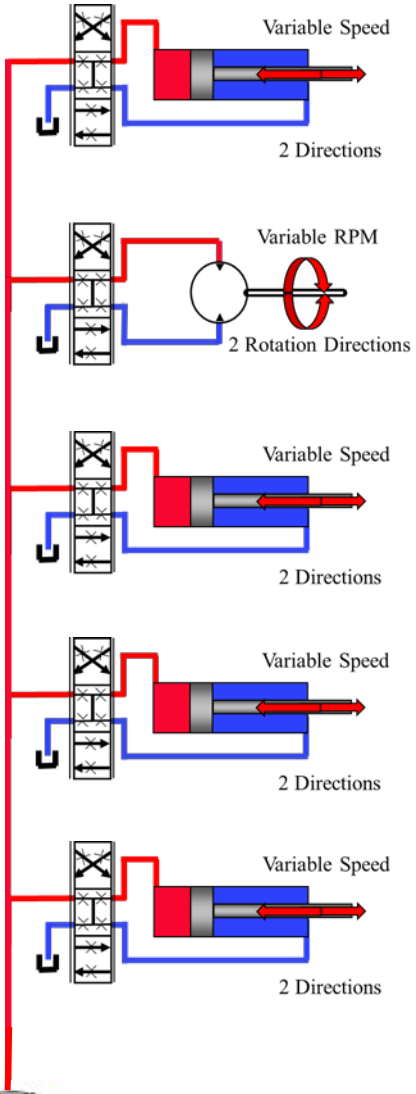

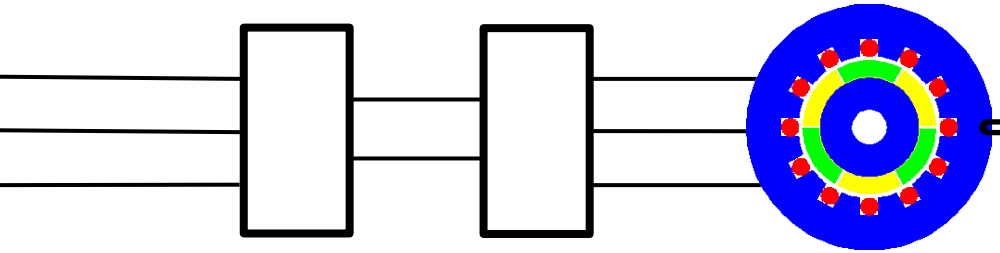

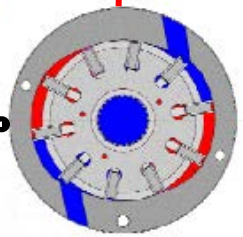

Frequency Inverter Permanent Magnet Motor Vane

Copyright © Parker Hannifin GmbH ◦ Dr.-Ing. Gerd Scheffel 2012

- > 50 ccm
- Inertia of Motor + Pump Rotors limits Dynamics
- Cavitation in Suction Line limits Dynamics
- Shaft Torque limits Dynamics

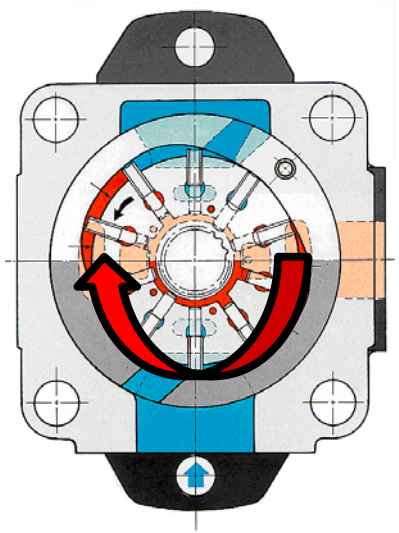

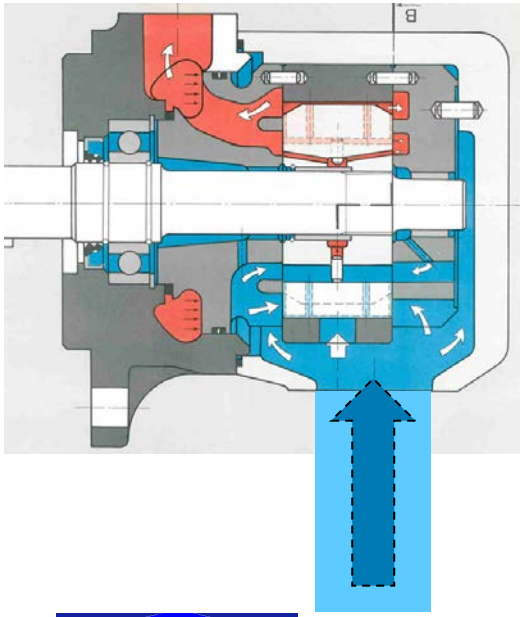

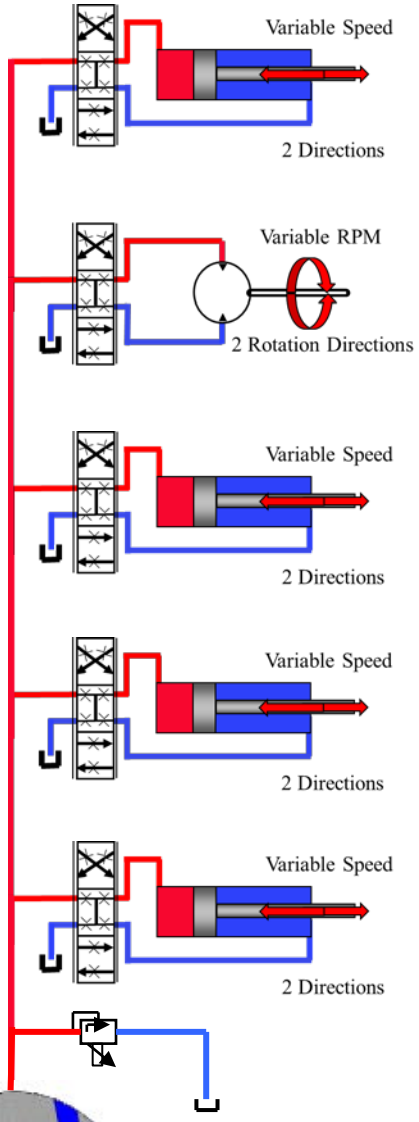

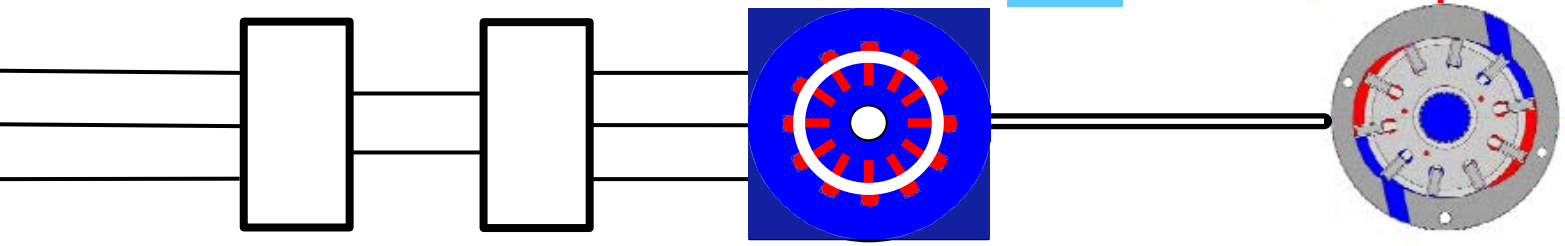

Frequency Inverter Square Frame Induction Motor Vane

Copyright © Parker Hannifin GmbH ◦ Dr.-Ing. Gerd Scheffel 2012

- > 50 ccm
- Inertia of Motor + Pump Rotors limits Dynamics
- Cavitation in Suction Line limits Dynamics
- Shaft Torque limits Dynamics

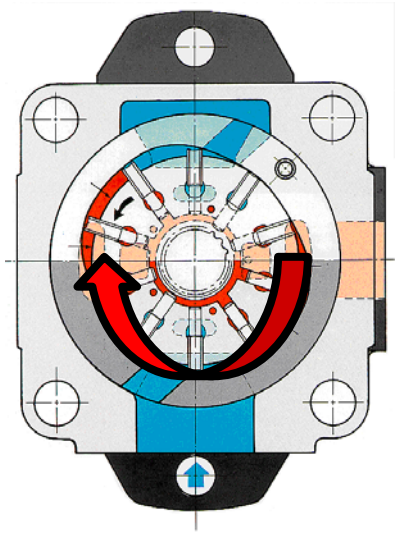

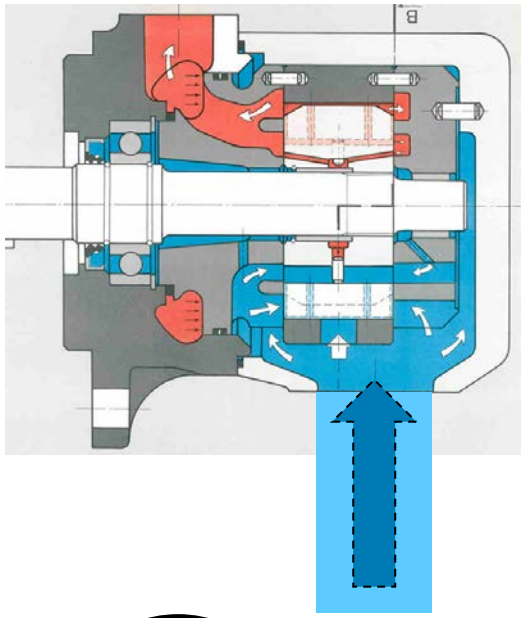

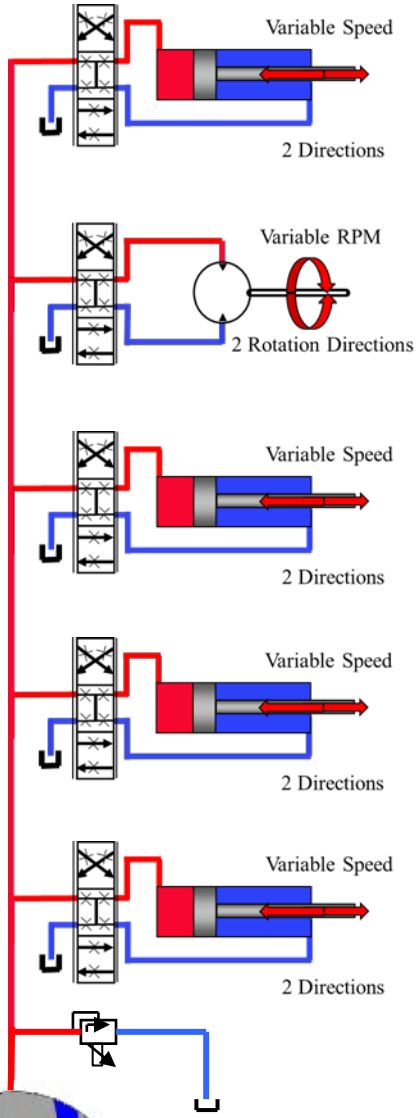

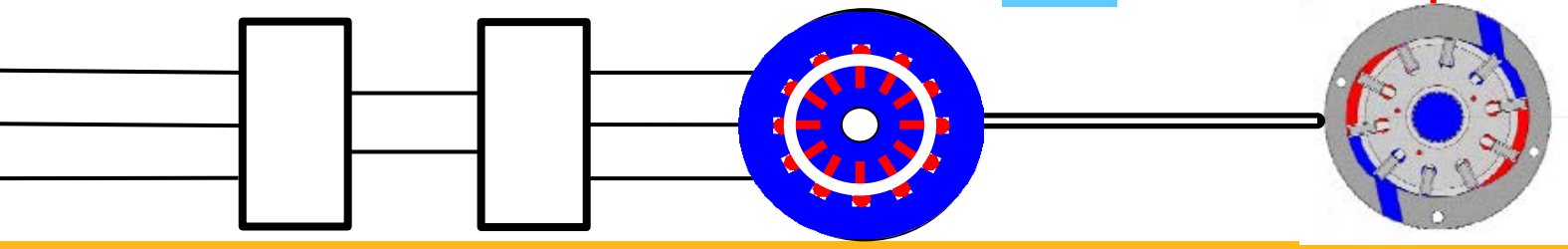

Frequency Inverter Induction Motor Vane

- Double Pump in common Housing
- Split Flow

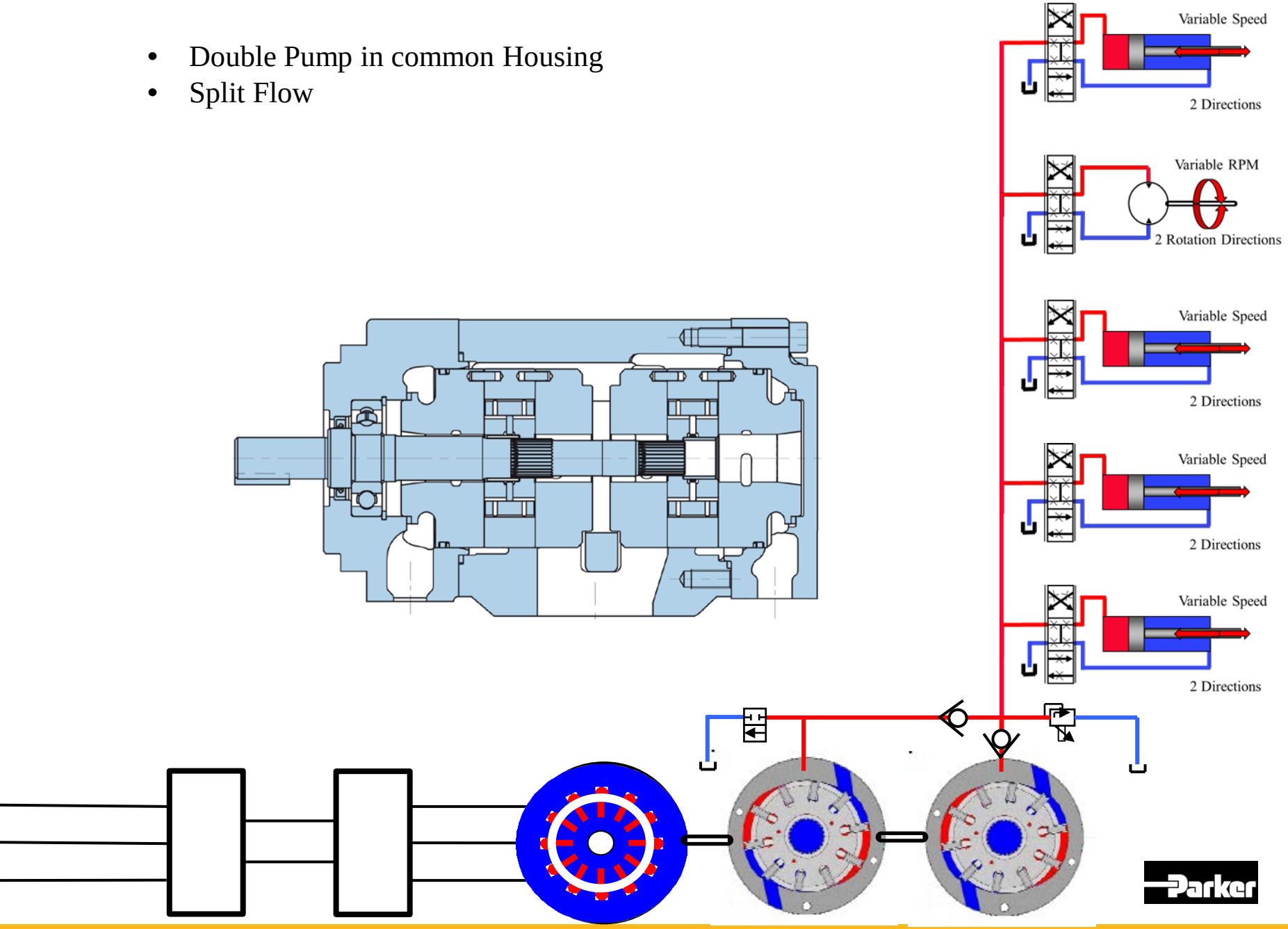

- Double Pump in common Housing
- Split Flow

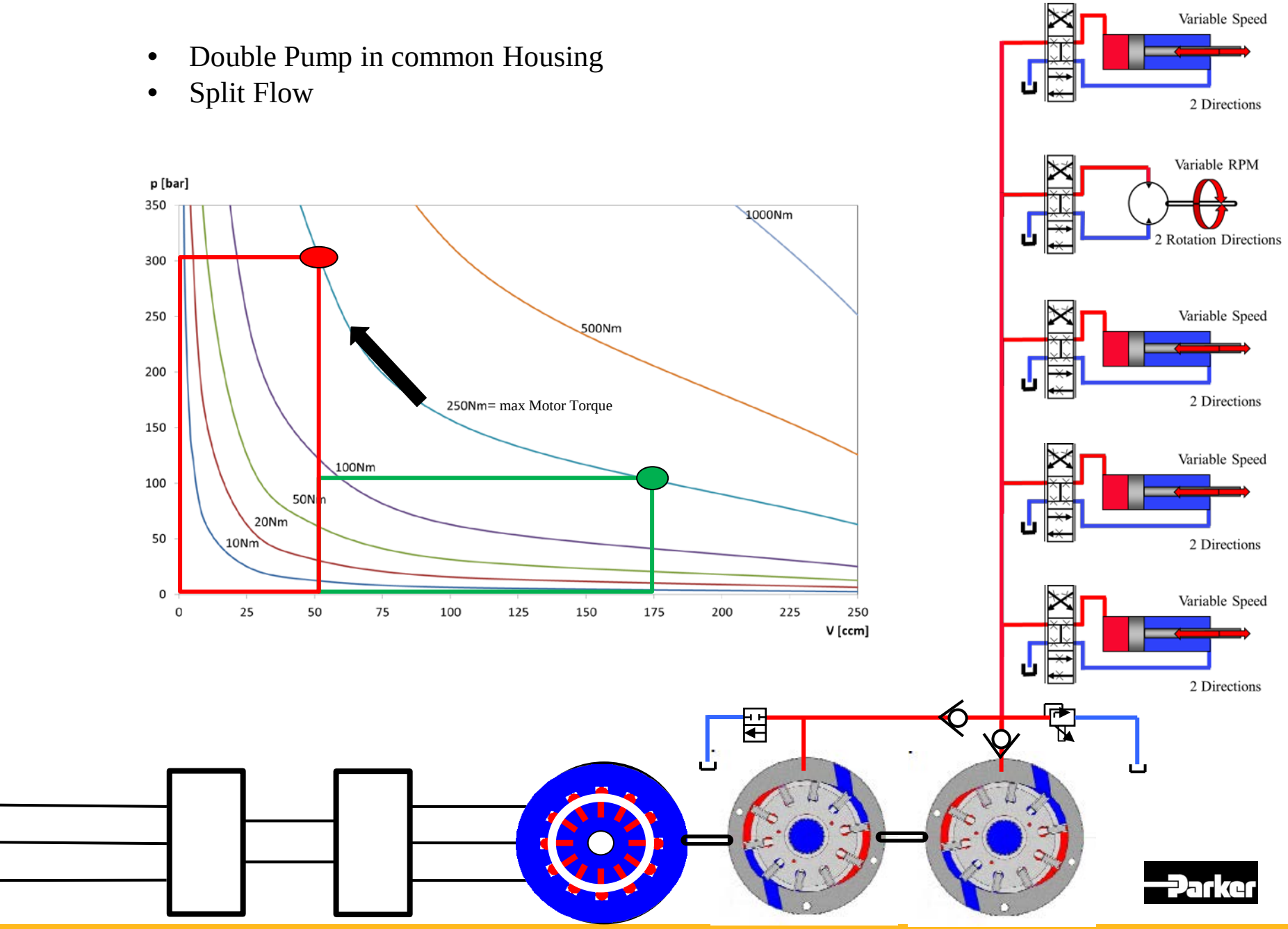

- 4 Quadrant Piston Pump
- Decompression w Pump

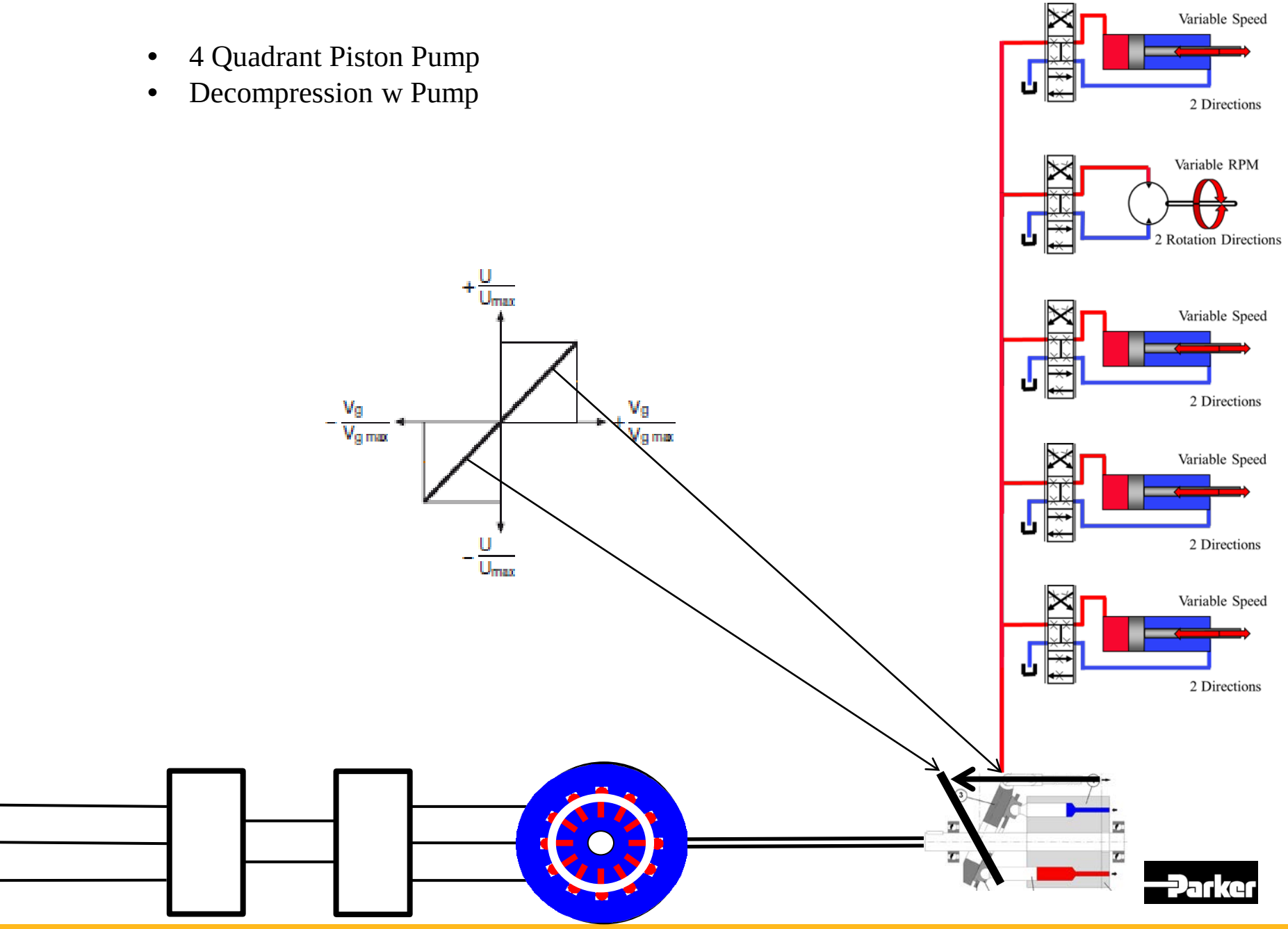

- Pressure compensated Piston Pump
- Decompression w joined Pressure Relief

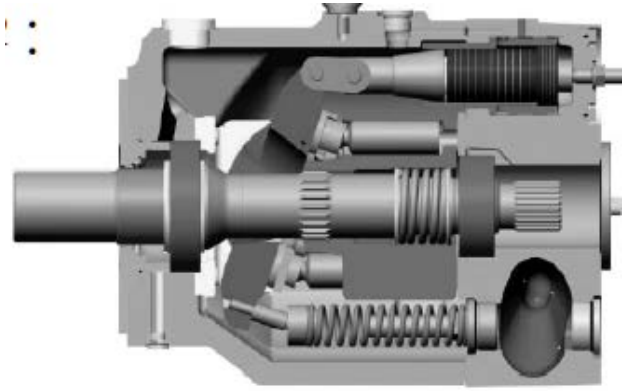

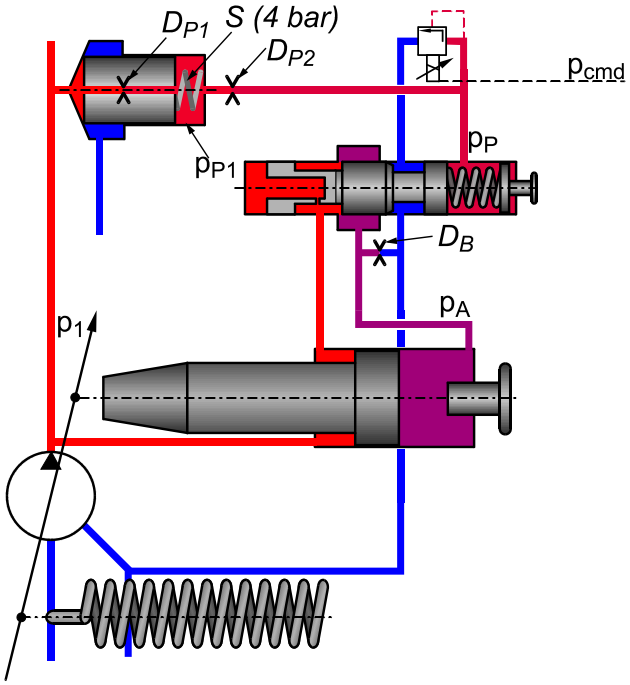

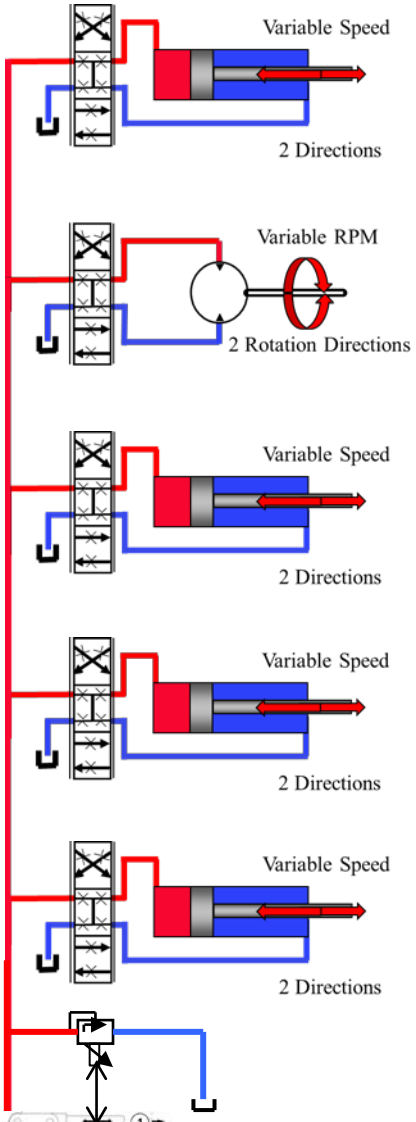

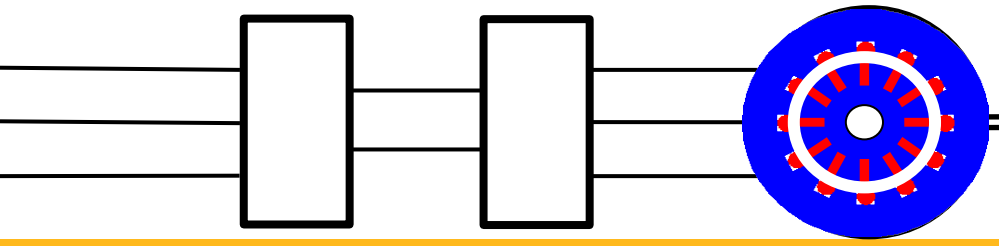

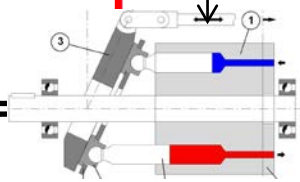

Frequency Inverter | Induction Motor | Variable Piston

- Pressure compensated Piston Pump
- Pump to run full Stroke down to min RPM

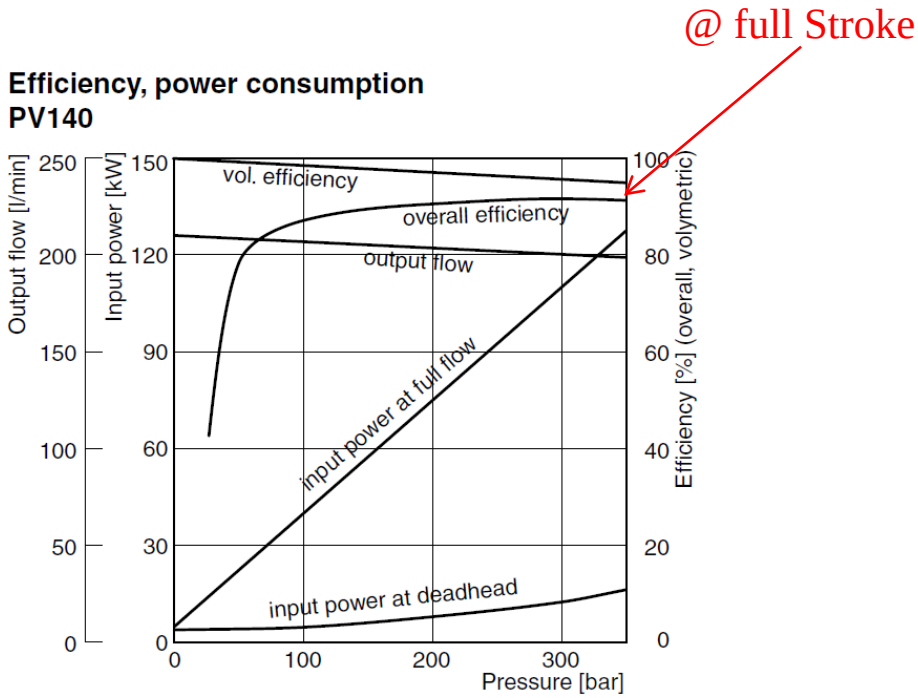

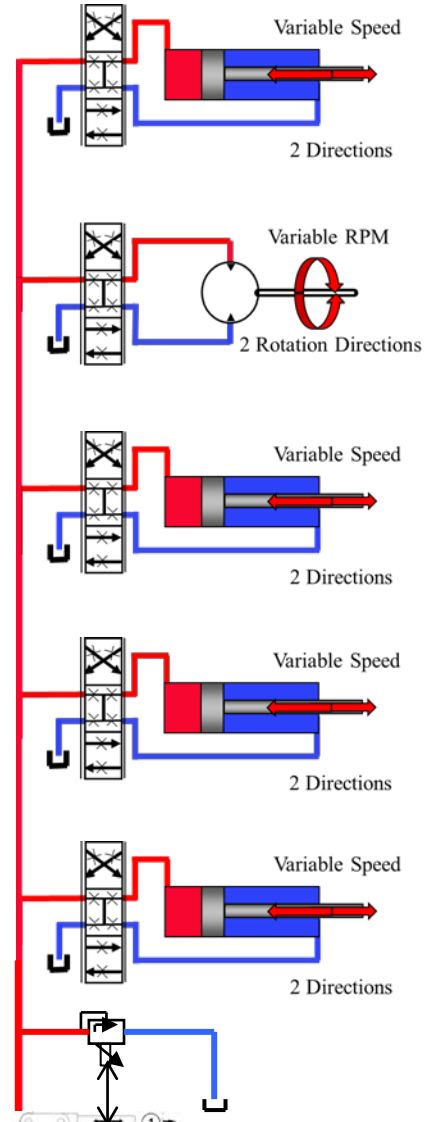

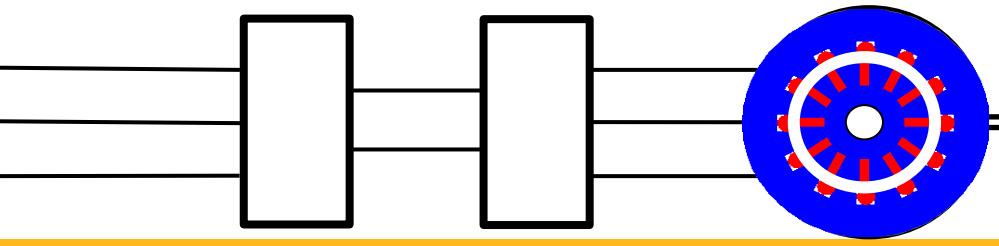

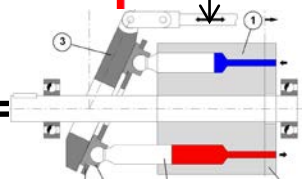

Frequency Inverter Induction Motor Variable Piston

Vane T7D 137,5 ccm

0,2 – 0,8 kW

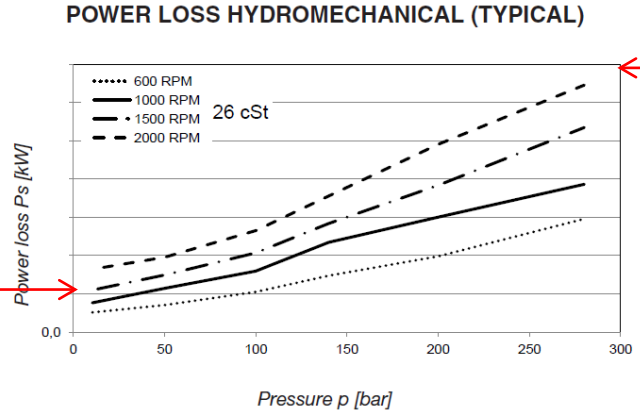

14 kW

@ 300 bar
2000 RPM

Variable Piston PV 140

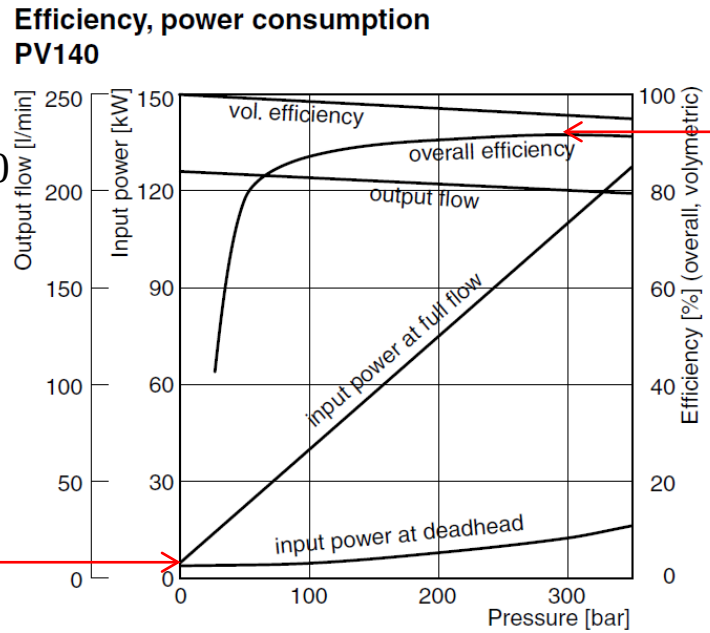

7 kW

4 kW

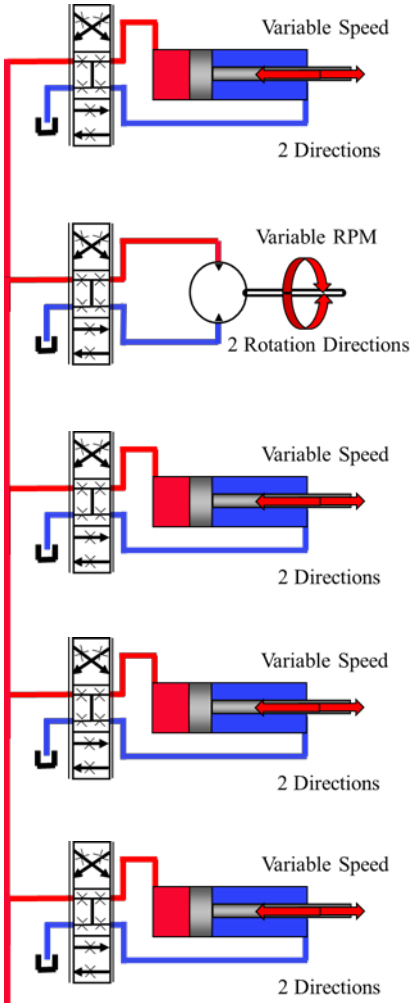

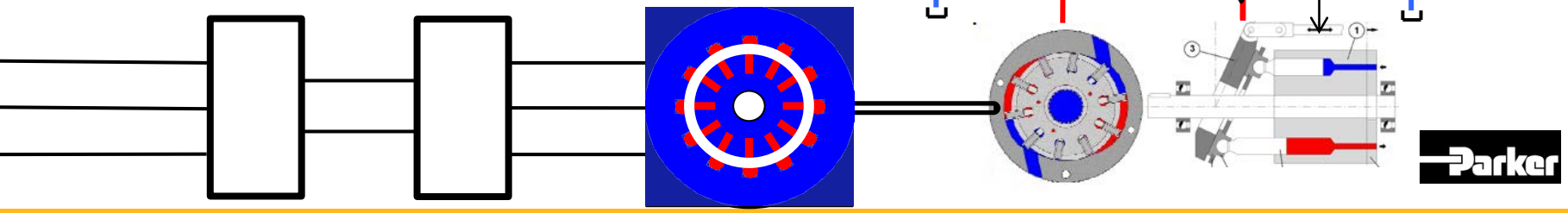

Frequency Inverter Square Frame Induction Motor Vane Variable Piston

- Fix and variable Pump Combination

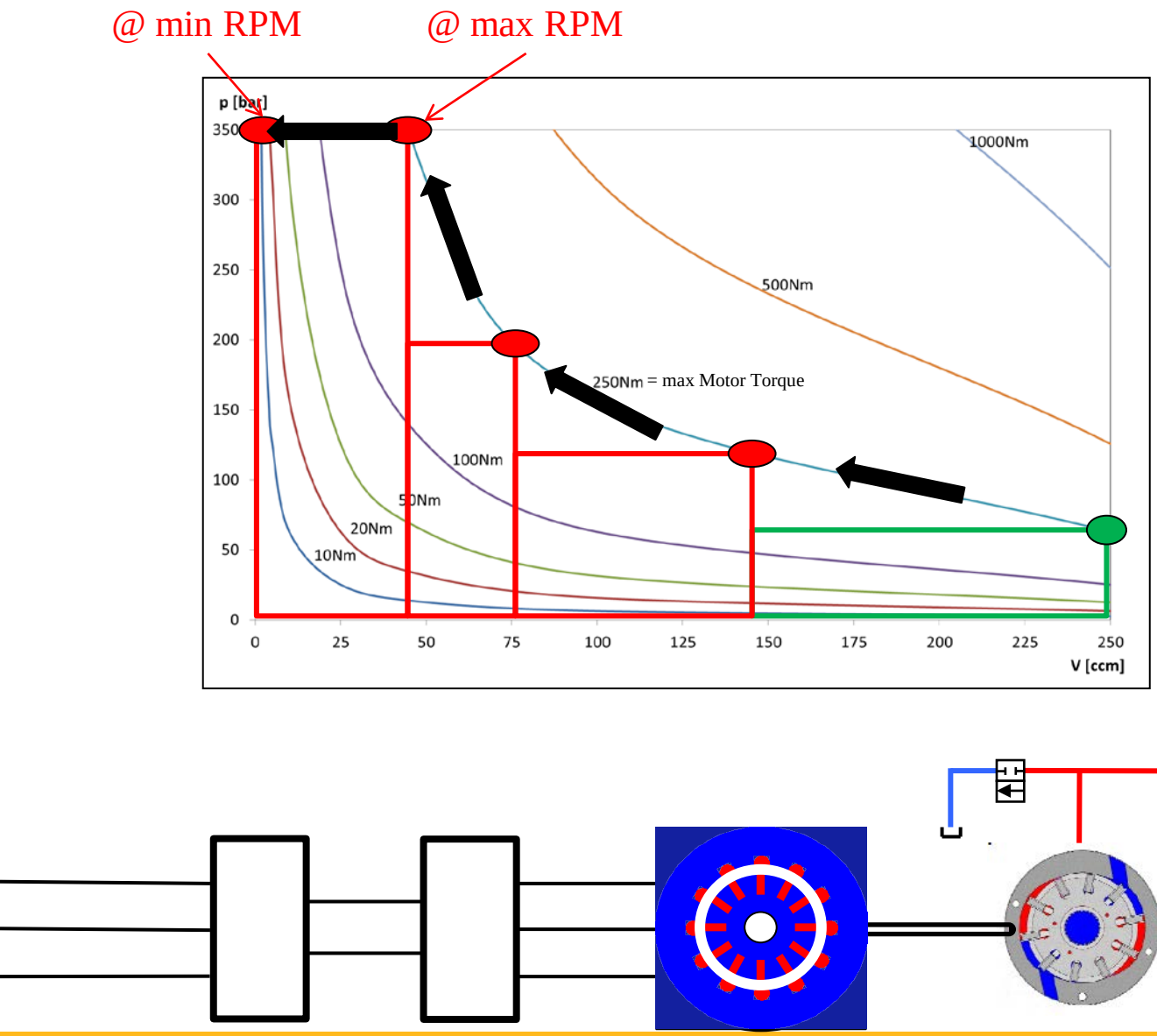

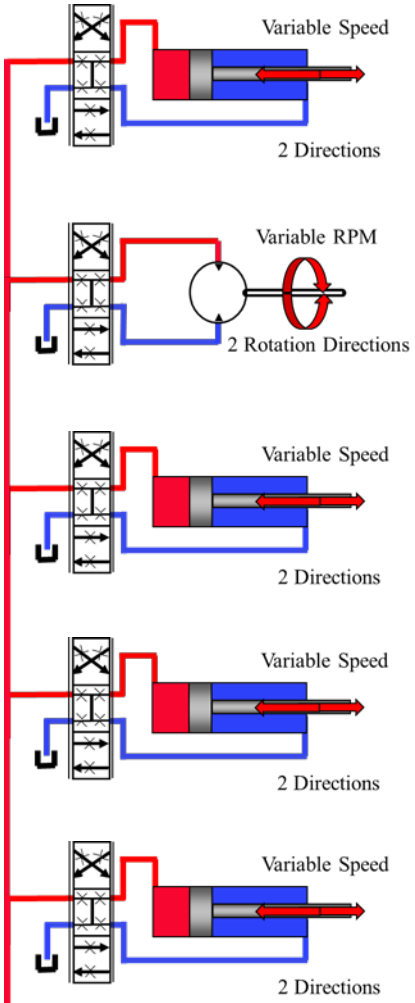

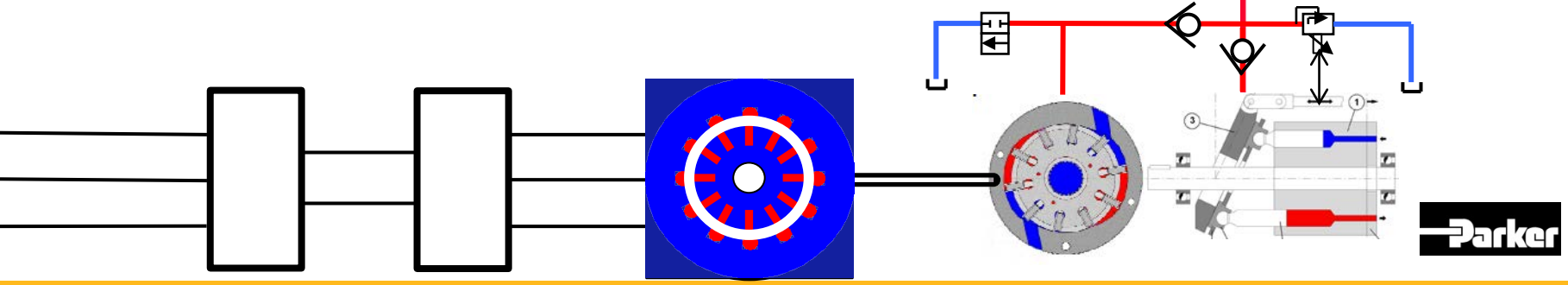

Frequency Inverter Square Frame Induction Motor Vane110 ccm Variable Piston 140 ccm

DriveCreator – approach

Pressure + flow demand

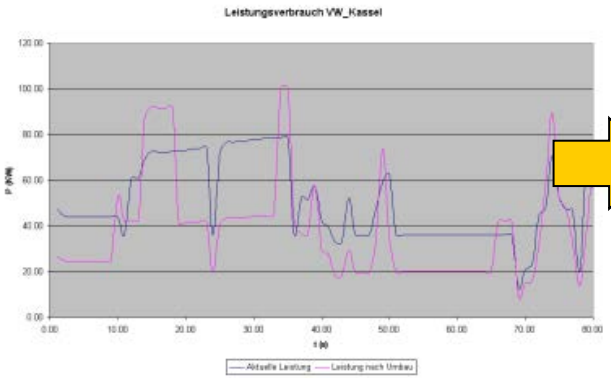

Hydraulic pump concept

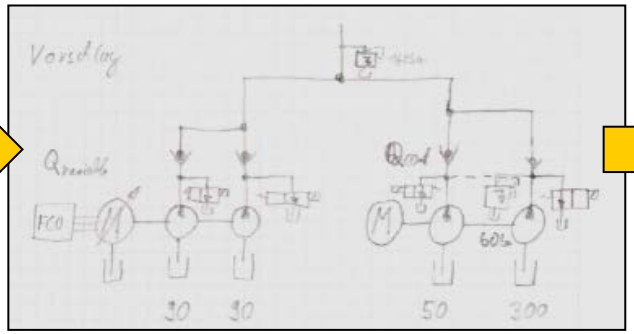

Calculation tool

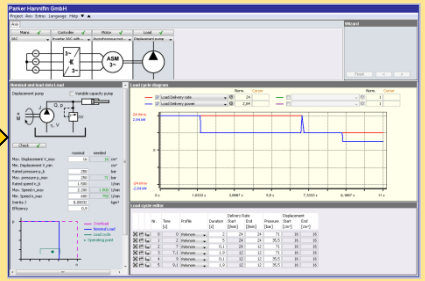

Component selection

Installation manual

Set up tool

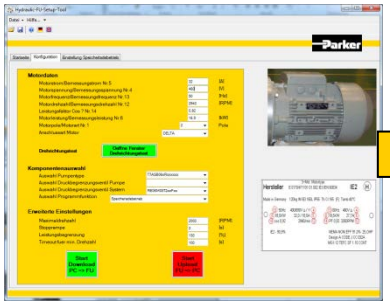

Application

Parker

Copyright © Parker Hannifin GmbH ◦ Dr.-Ing. Gerd Scheffel 2012

DriveCreator – approach

User input

Load cycle p/Q(t)

↓

Pump selection

Smallest possible pump size

↓

Motor selection

Torque, lowest energy input

↓

Drive selection

Max. current

Copyright © Parker Hannifin GmbH ◦ Dr.-Ing. Gerd Scheffel 2012

DriveCreator – overview

- Offline & Internet version
- Wizard based
- One page design
- Database support (pump, motor and inverter)
- Sizing of pump, motor and inverter
- Plausibility check of user input
- Single and double pumps
- Induction Motor and Permanent Magnet Motor technology
- Motor temperature calculation
- Efficiency comparison inverter vs grid

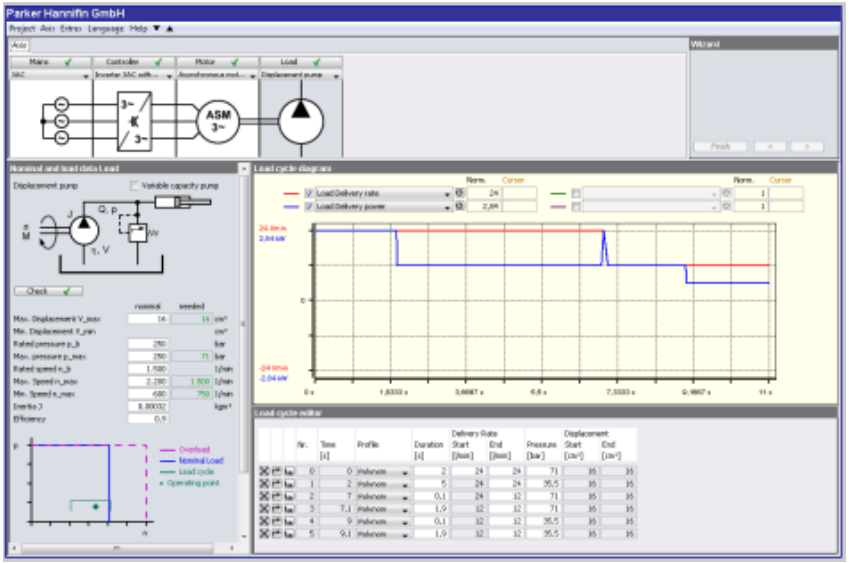

Copyright © Parker Hannifin GmbH ◦ Dr.-Ing. Gerd Scheffel 2012

DriveCreator – pump sizing

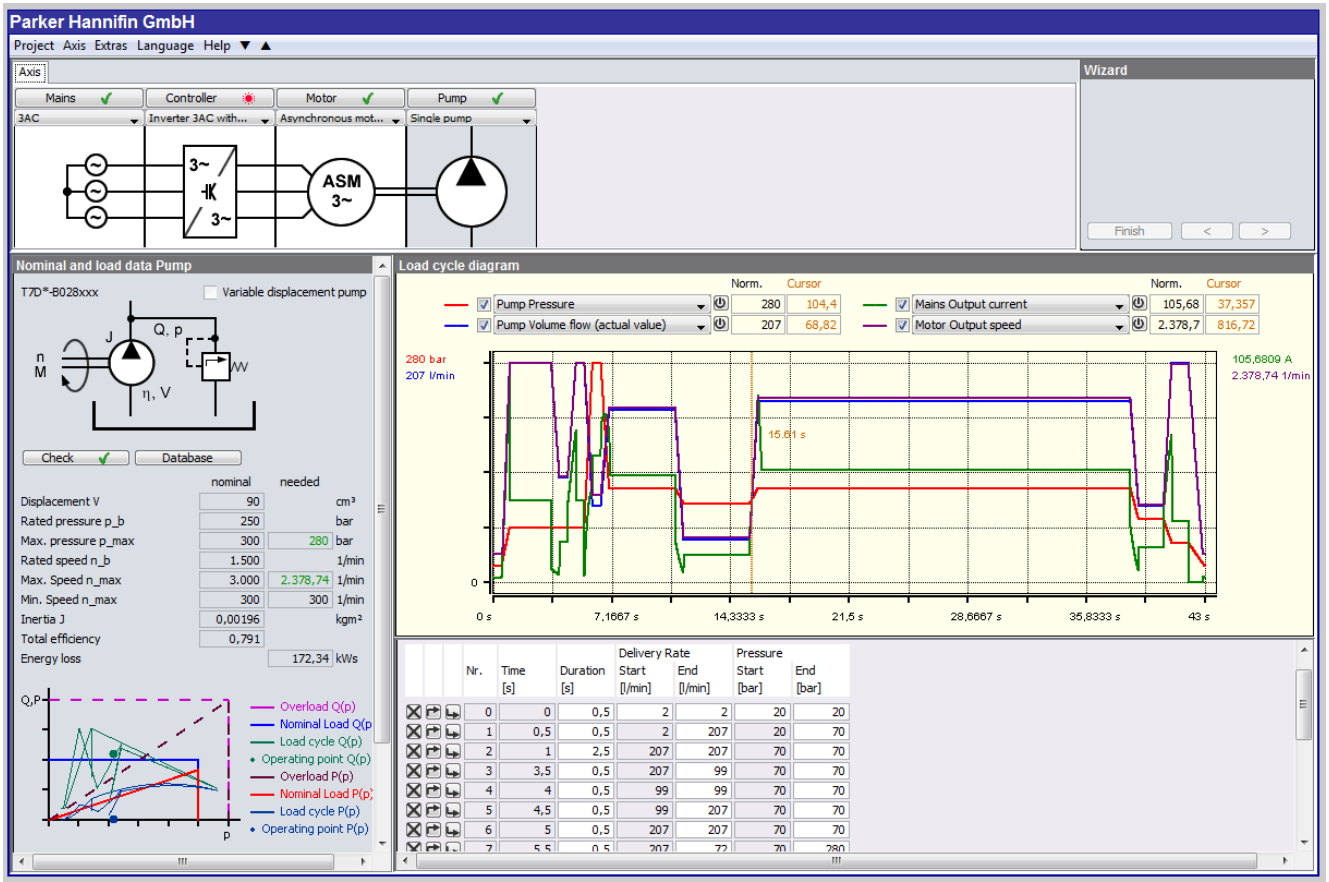

pump data base

Name	Katalogangabe Fördermenge [cm³/U]	Katalogangabe Norminaldruck [bar]	Katalogangabe Maximaldruck [bar]	Katalogangabe Bemessungsdrehzahl [1/min]	Min Drehzahl [1/min]	Katalogangabe Max Drehzahl [1/min]	Katalogangabe Massenträgheits-moment [kgm²]
Name	Displacement cm³/rev	Nominal pressure [bar]	Max. pressure [bar]	Rated speed [rpm]	Min. rotation speed [rpm]	Max. rotation speed [rpm]	Inertia [kgm²]
PV016	16	350	420	1500	300	3000	0.0017
PV046	46	350	420	1500	300	2800	0.0043
PV092	92	350	420	1500	300	2300	0.018
PV180	180	350	420	1500	300	2200	0.03
PV270	270	350	420	1500	300	1800	0.098
T7BB05	15.9	290	320	1500	600	3600	0.0032
T7BB10	31.8	290	320	1500	600	3600	0.0032
T7BB15	50	240	280	1500	600	3000	0.0032

+

η_{pump}

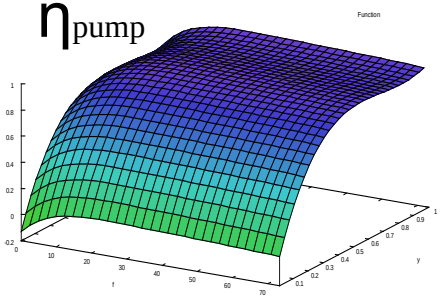

Copyright © Parker Hannifin GmbH ◦ Dr.-Ing. Gerd Scheffel 2012

DriveCreator – pump sizing

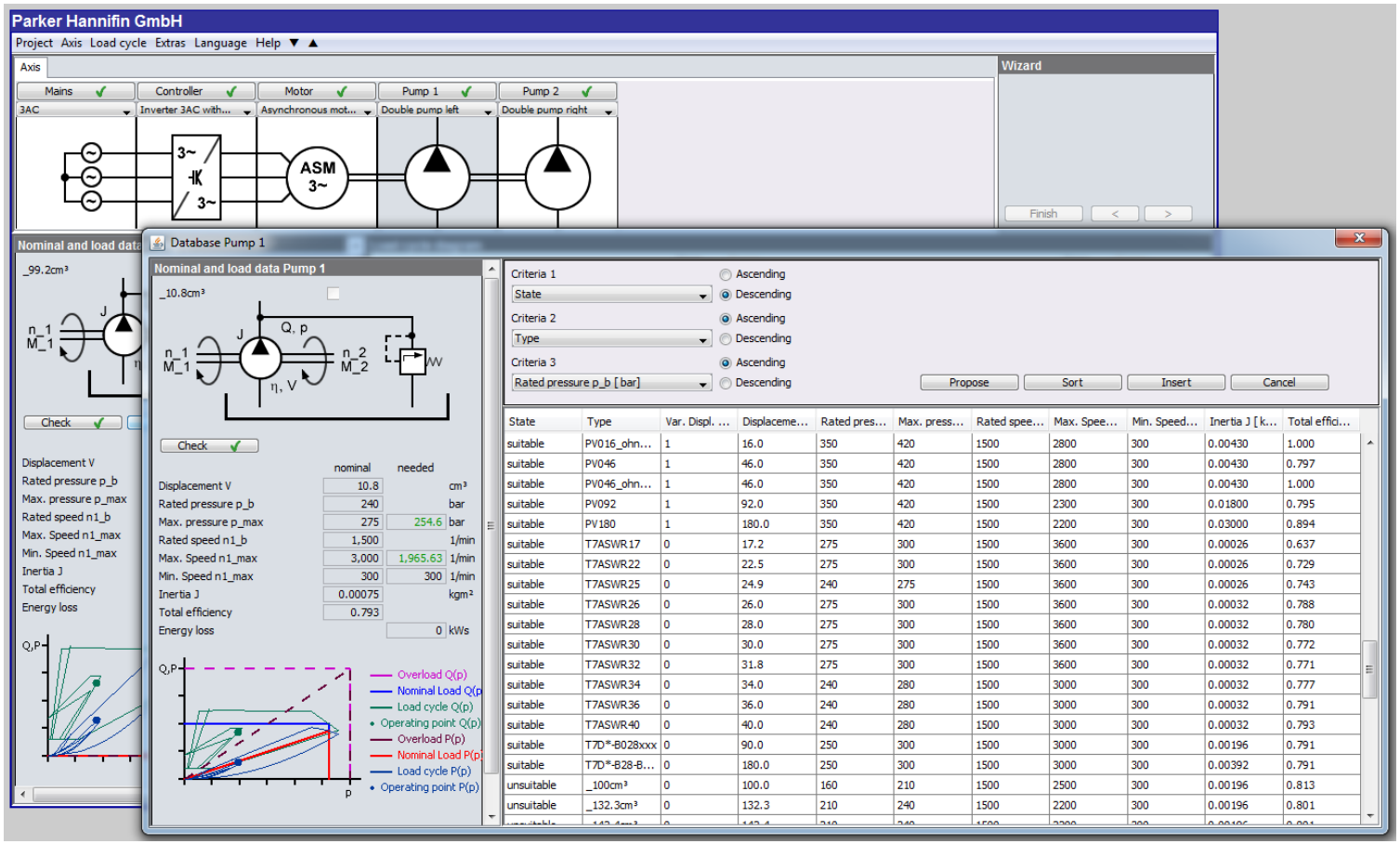

State	Type	Var. Displ. ...	Displaceme...	Rated pres...	Max. press...	Rated spee...	Max. Spee...	Min. Speed...	Inertia J [k...	Total effici...
suitable	PV016_ohn...	1	16.0	350	420	1500	2800	300	0.00430	1.000
suitable	PV046	1	46.0	350	420	1500	2800	300	0.00430	0.797
suitable	PV046_ohn...	1	46.0	350	420	1500	2800	300	0.00430	1.000
suitable	PV092	1	92.0	350	420	1500	2300	300	0.01800	0.795
suitable	PV180	1	180.0	350	420	1500	2200	300	0.03000	0.894
suitable	T7ASWR17	0	17.2	275	300	1500	3600	300	0.00026	0.637
suitable	T7ASWR22	0	22.5	275	300	1500	3600	300	0.00026	0.729
suitable	T7ASWR25	0	24.9	240	275	1500	3600	300	0.00026	0.743
suitable	T7ASWR26	0	26.0	275	300	1500	3600	300	0.00032	0.788
suitable	T7ASWR28	0	28.0	275	300	1500	3600	300	0.00032	0.780
suitable	T7ASWR30	0	30.0	275	300	1500	3600	300	0.00032	0.772
suitable	T7ASWR32	0	31.8	275	300	1500	3600	300	0.00032	0.771
suitable	T7ASWR34	0	34.0	240	280	1500	3000	300	0.00032	0.777
suitable	T7ASWR36	0	36.0	240	280	1500	3000	300	0.00032	0.791
suitable	T7ASWR40	0	40.0	240	280	1500	3000	300	0.00032	0.793
suitable	T7D*-B028xxx	0	90.0	250	300	1500	3000	300	0.00196	0.791
suitable	T7D*-B28-B...	0	180.0	250	300	1500	3000	300	0.00392	0.791
unsuitable	_100cm³	0	100.0	160	210	1500	2500	300	0.00196	0.813
unsuitable	_132.3cm³	0	132.3	210	240	1500	2200	300	0.00196	0.801

Copyright © Parker Hannifin GmbH ◦ Dr.-Ing. Gerd Scheffel 2012

DriveCreator – pump sizing

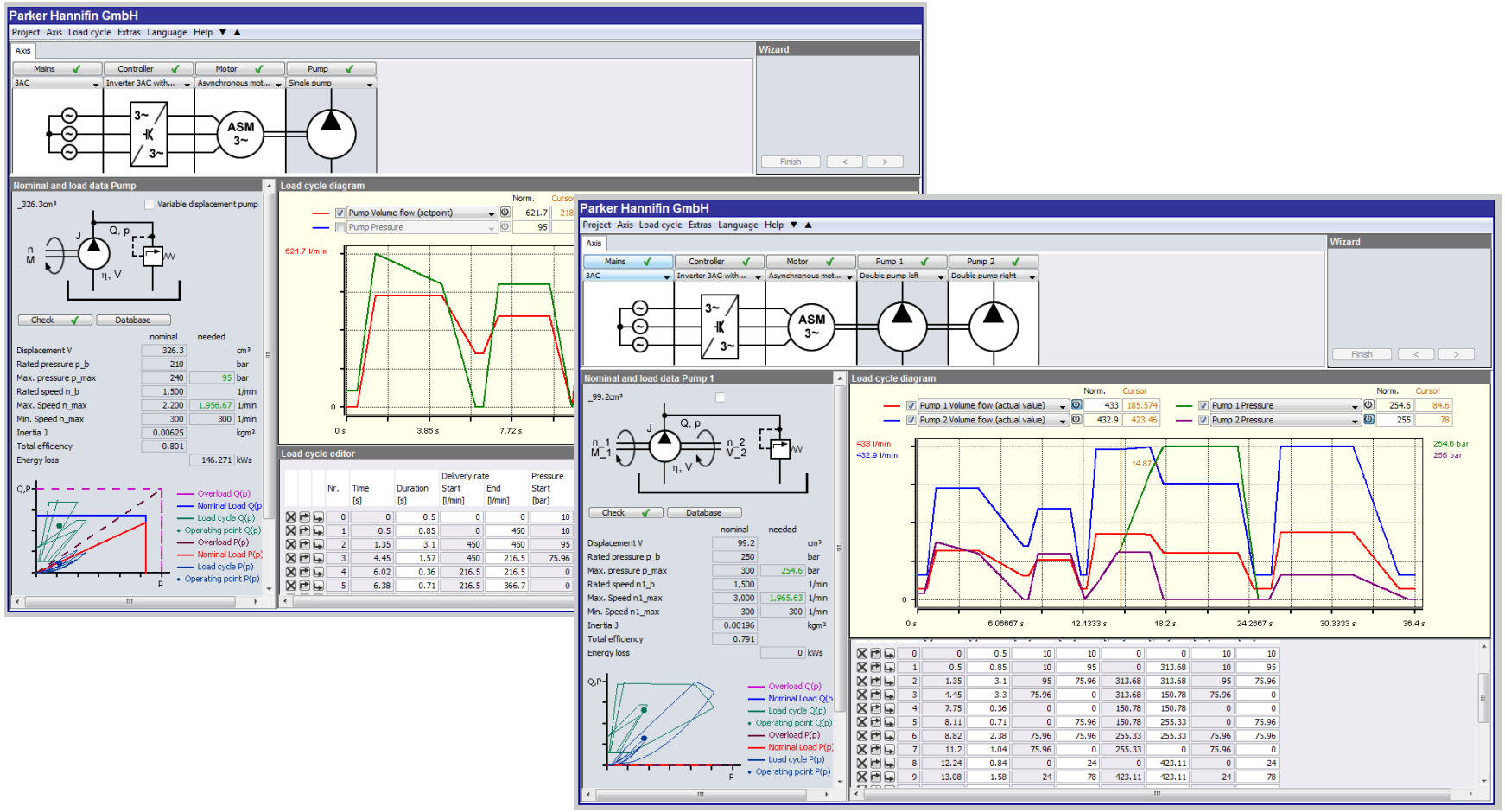

Copyright © Parker Hannifin GmbH ◦ Dr.-Ing. Gerd Scheffel 2012

DriveCreator – motor sizing

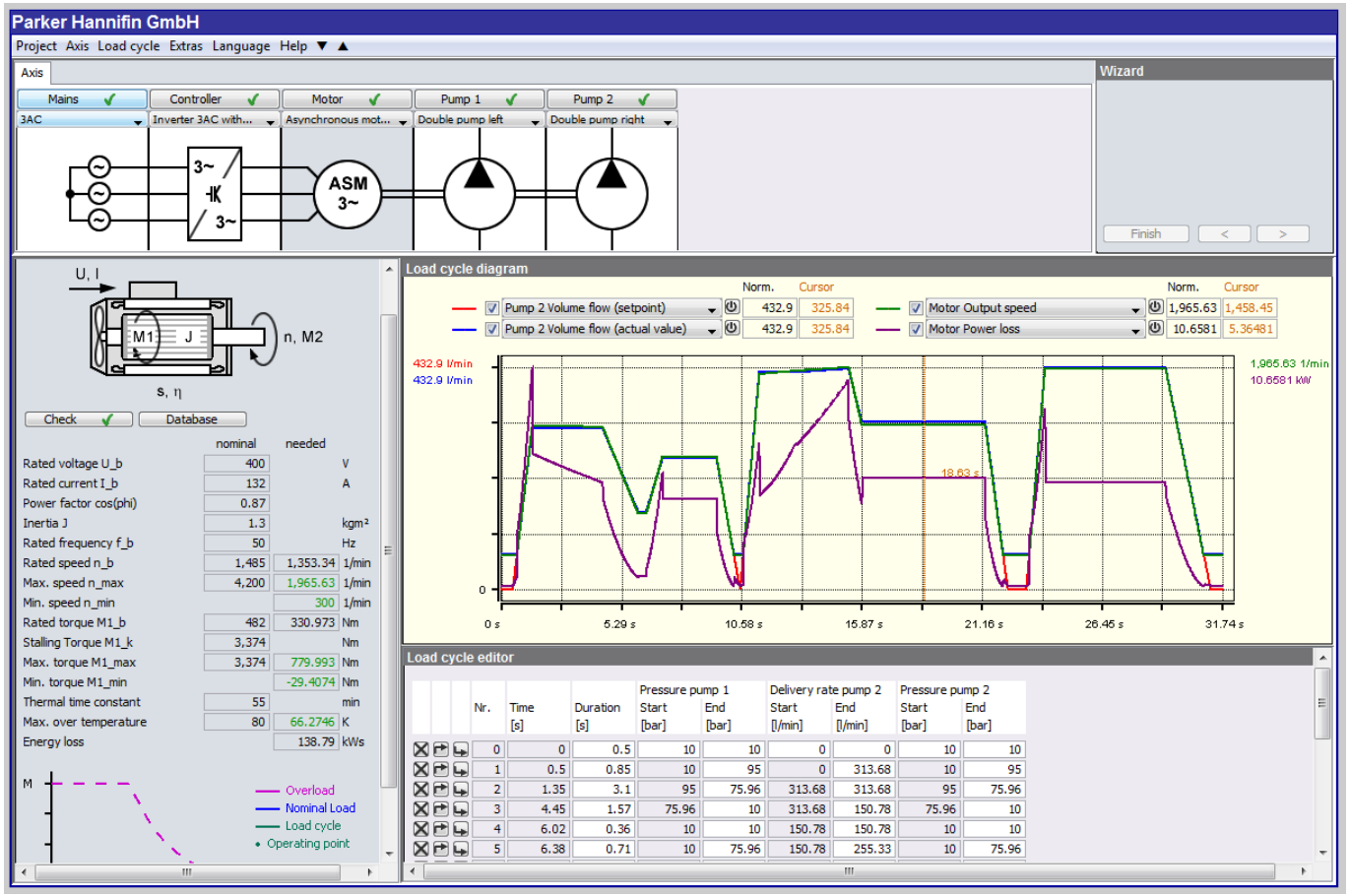

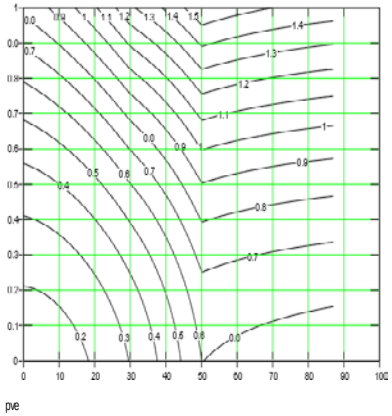

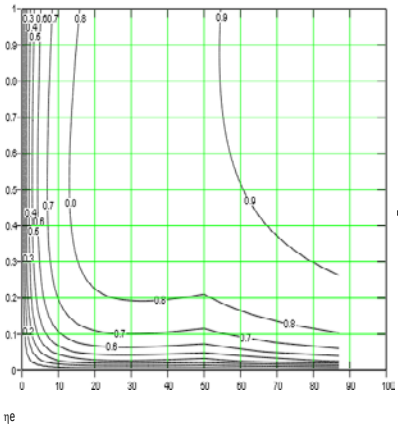

Copyright © Parker Hannifin GmbH ◦ Dr.-Ing. Gerd Scheffel 2012

DriveCreator – motor sizing

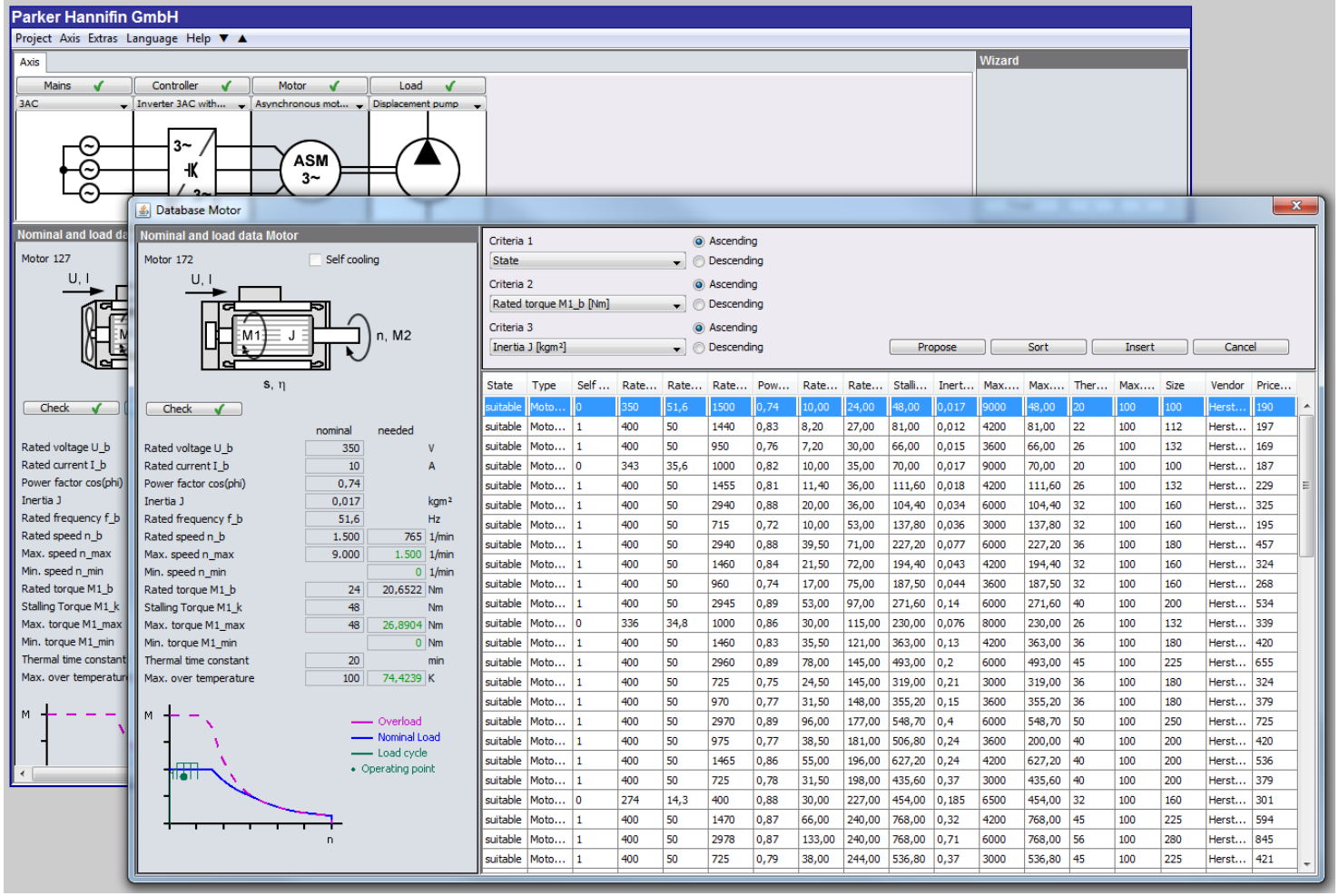

State	Type	Self ...	Rate...	Rate...	Rate...	Pow...	Rate...	Rate...	Stalli...	Inert...	Max....	Max....	Ther...	Max....	Size	Vendor	Price...
suitable	Moto...	0	350	51,6	1500	0,74	10,00	24,00	48,00	0,017	9000	48,00	20	100	100	Herst...	190
suitable	Moto...	1	400	50	1440	0,83	8,20	27,00	81,00	0,012	4200	81,00	22	100	112	Herst...	197
suitable	Moto...	1	400	50	950	0,76	7,20	30,00	66,00	0,015	3600	66,00	26	100	132	Herst...	169
suitable	Moto...	0	343	35,6	1000	0,82	10,00	35,00	70,00	0,017	9000	70,00	20	100	100	Herst...	187
suitable	Moto...	1	400	50	1455	0,81	11,40	36,00	111,60	0,018	4200	111,60	26	100	132	Herst...	229
suitable	Moto...	1	400	50	2940	0,88	20,00	36,00	104,40	0,034	6000	104,40	32	100	160	Herst...	325
suitable	Moto...	1	400	50	715	0,72	10,00	53,00	137,80	0,036	3000	137,80	32	100	160	Herst...	195
suitable	Moto...	1	400	50	2940	0,88	39,50	71,00	227,20	0,077	6000	227,20	36	100	180	Herst...	457
suitable	Moto...	1	400	50	1460	0,84	21,50	72,00	194,40	0,043	4200	194,40	32	100	160	Herst...	324
suitable	Moto...	1	400	50	960	0,74	17,00	75,00	187,50	0,044	3600	187,50	32	100	160	Herst...	268
suitable	Moto...	1	400	50	2945	0,89	53,00	97,00	271,60	0,14	6000	271,60	40	100	200	Herst...	534
suitable	Moto...	0	336	34,8	1000	0,86	30,00	115,00	230,00	0,076	8000	230,00	26	100	132	Herst...	339
suitable	Moto...	1	400	50	1460	0,83	35,50	121,00	363,00	0,13	4200	363,00	36	100	180	Herst...	420
suitable	Moto...	1	400	50	2960	0,89	78,00	145,00	493,00	0,2	6000	493,00	45	100	225	Herst...	655
suitable	Moto...	1	400	50	725	0,75	24,50	145,00	319,00	0,21	3000	319,00	36	100	180	Herst...	324
suitable	Moto...	1	400	50	970	0,77	31,50	148,00	355,20	0,15	3600	355,20	36	100	180	Herst...	379
suitable	Moto...	1	400	50	2970	0,89	96,00	177,00	548,70	0,4	6000	548,70	50	100	250	Herst...	725
suitable	Moto...	1	400	50	975	0,77	38,50	181,00	506,80	0,24	3600	200,00	40	100	200	Herst...	420
suitable	Moto...	1	400	50	1465	0,86	55,00	196,00	627,20	0,24	4200	627,20	40	100	200	Herst...	536
suitable	Moto...	1	400	50	725	0,78	31,50	198,00	435,60	0,37	3000	435,60	40	100	200	Herst...	379
suitable	Moto...	0	274	14,3	400	0,88	30,00	227,00	454,00	0,185	6500	454,00	32	100	160	Herst...	301
suitable	Moto...	1	400	50	1470	0,87	66,00	240,00	768,00	0,32	4200	768,00	45	100	225	Herst...	594
suitable	Moto...	1	400	50	2978	0,87	133,00	240,00	768,00	0,71	6000	768,00	56	100	280	Herst...	845
suitable	Moto...	1	400	50	725	0,79	38,00	244,00	536,80	0,37	3000	536,80	45	100	225	Herst...	421

Copyright © Parker Hannifin GmbH ◦ Dr.-Ing. Gerd Scheffel 2012

DriveCreator – drive sizing

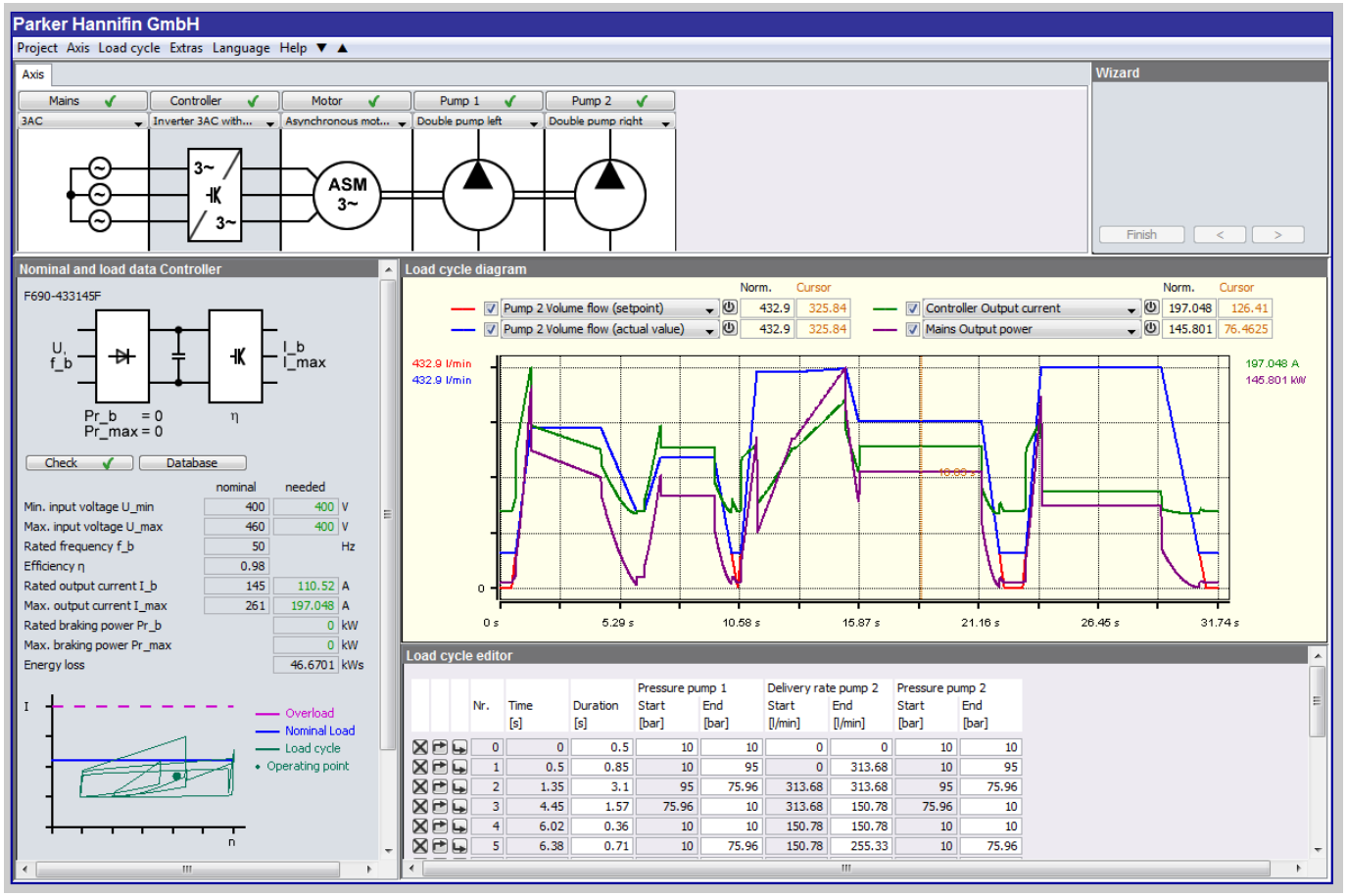

Copyright © Parker Hannifin GmbH ◦ Dr.-Ing. Gerd Scheffel 2012

DriveCreator – drive sizing

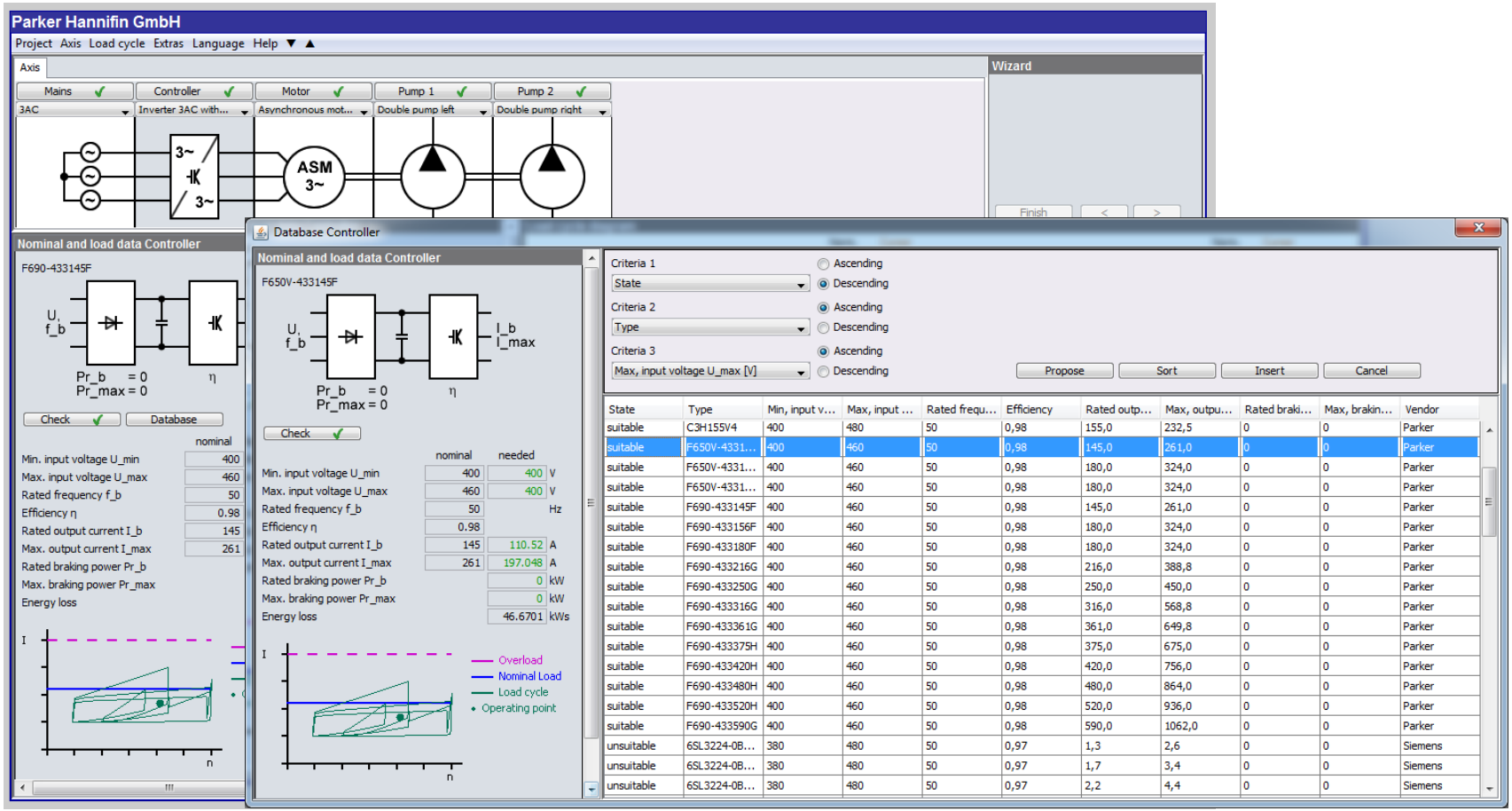

State	Type	Min, input v...	Max, input ...	Rated frequ...	Efficiency	Rated outp...	Max, outpu...	Rated braki...	Max, brakin...	Vendor
suitable	C3H155V4	400	480	50	0,98	155,0	232,5	0	0	Parker
suitable	F650V-4331...	400	460	50	0,98	145,0	261,0	0	0	Parker
suitable	F650V-4331...	400	460	50	0,98	180,0	324,0	0	0	Parker
suitable	F650V-4331...	400	460	50	0,98	180,0	324,0	0	0	Parker
suitable	F690-433145F	400	460	50	0,98	145,0	261,0	0	0	Parker
suitable	F690-433156F	400	460	50	0,98	180,0	324,0	0	0	Parker
suitable	F690-433180F	400	460	50	0,98	180,0	324,0	0	0	Parker
suitable	F690-433216G	400	460	50	0,98	216,0	388,8	0	0	Parker
suitable	F690-433250G	400	460	50	0,98	250,0	450,0	0	0	Parker
suitable	F690-433316G	400	460	50	0,98	316,0	568,8	0	0	Parker
suitable	F690-433361G	400	460	50	0,98	361,0	649,8	0	0	Parker
suitable	F690-433375H	400	460	50	0,98	375,0	675,0	0	0	Parker
suitable	F690-433420H	400	460	50	0,98	420,0	756,0	0	0	Parker
suitable	F690-433480H	400	460	50	0,98	480,0	864,0	0	0	Parker
suitable	F690-433520H	400	460	50	0,98	520,0	936,0	0	0	Parker
suitable	F690-433590G	400	460	50	0,98	590,0	1062,0	0	0	Parker
unsuitable	6SL3224-0B...	380	480	50	0,97	1,3	2,6	0	0	Siemens
unsuitable	6SL3224-0B...	380	480	50	0,97	1,7	3,4	0	0	Siemens
unsuitable	6SL3224-0B...	380	480	50	0,97	2,2	4,4	0	0	Siemens

Copyright © Parker Hannifin GmbH ◦ Dr.-Ing. Gerd Scheffel 2012

DriveCreator – packages

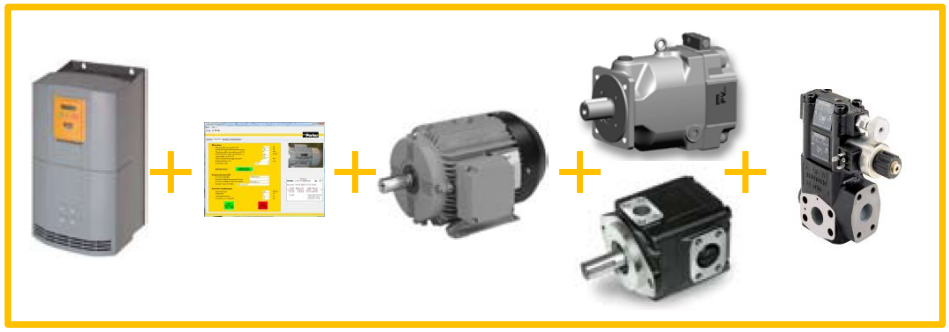

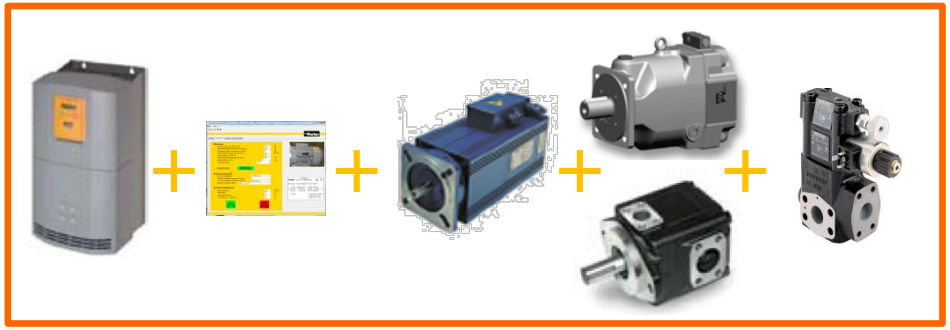

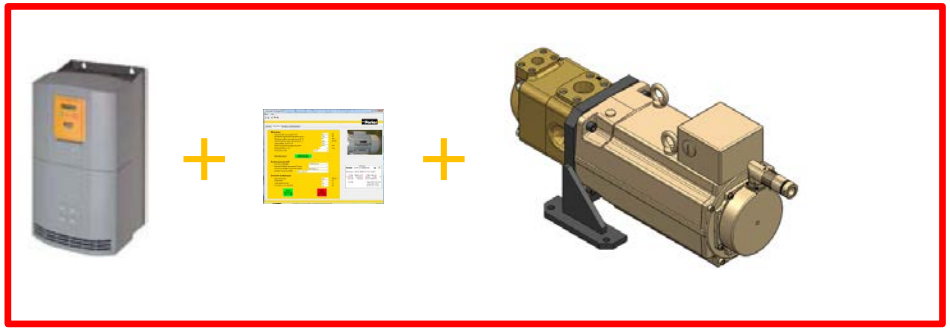

- F690p / AC30F / Compax3 – drive with hydraulic function
- Induction motor
- Permanent magnet motor
- Pump + valve
- Assembled
- Tested

DriveCreator – set up tool

- Input motor data according to name plate
- Test of direction at low speed
- Component selection of pump and pressure relief valve
- Program function:
  - Accu charging
  - p/Q control
  - …
- Configuration download

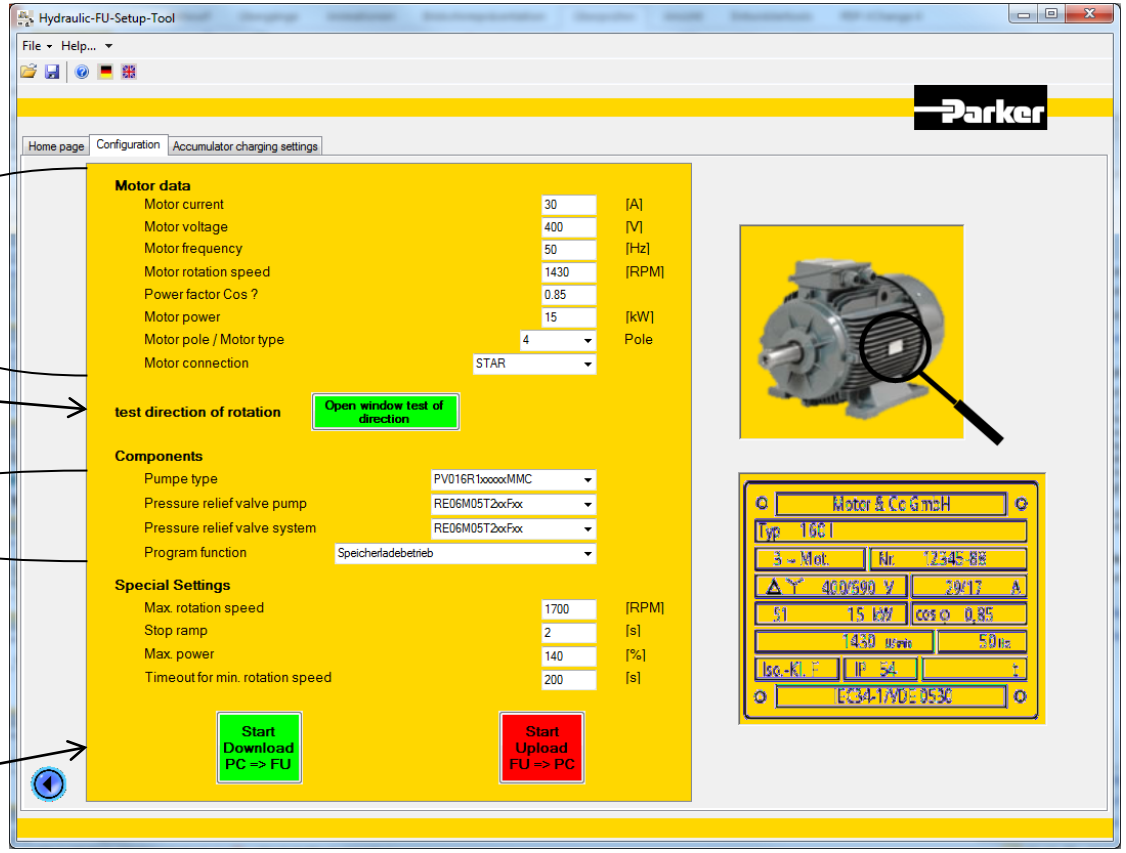

Application examples

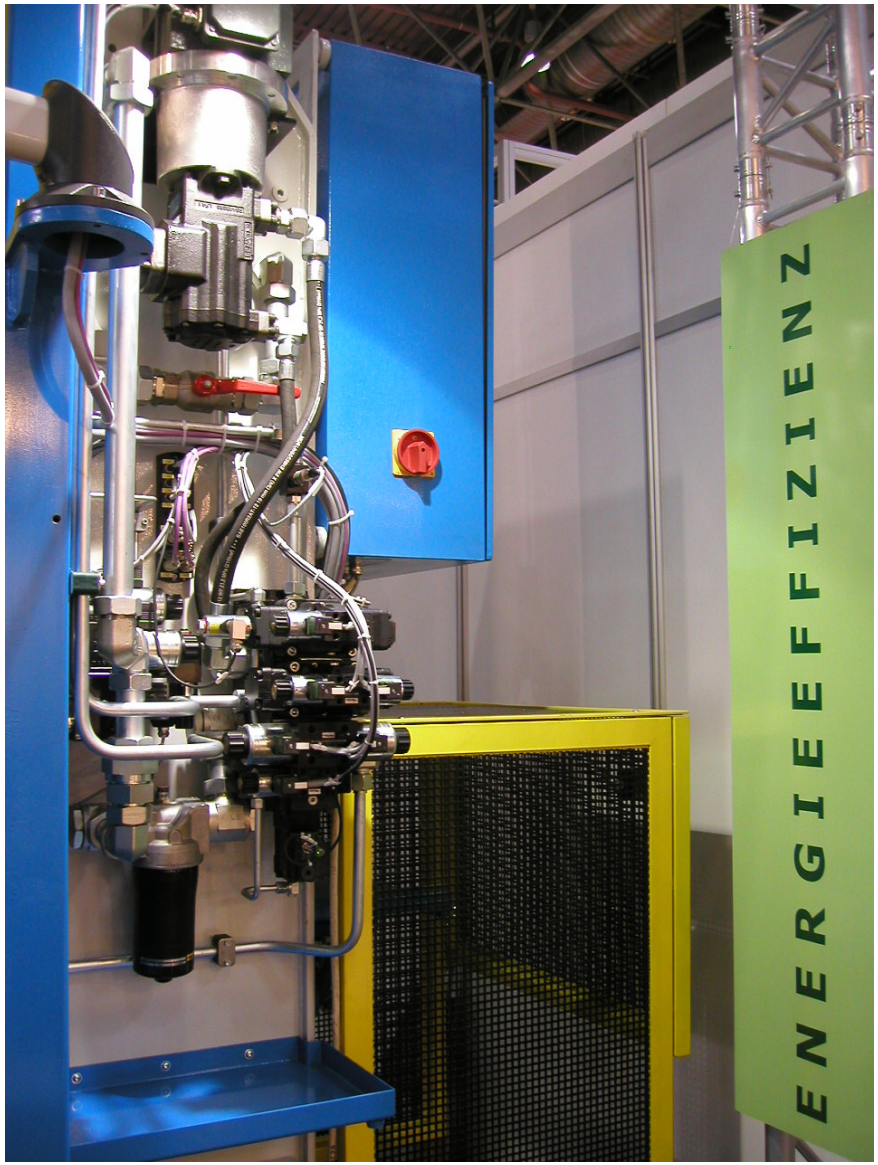

Starting with the End in Mind

- Saving energy > only needed power for the motor
  > smaller components
  > higher efficiency
  > less fluid cooling

- Reducing noise > noise only @ high demand

- Increasing power density > higher delivery @ same frame size

Copyright © Parker Hannifin GmbH ◦ Dr.-Ing. Gerd Scheffel 2012

Energy Efficient Hydraulics

Variable Frequency Drives as Pump Prime Movers

Presented by Dr.-Ing. Gerd Scheffel

ENGINEERING YOUR SUCCESS.

Copyright © Parker Hannifin GmbH ◦ Dr.-Ing. Gerd Scheffel 2012